IEI Integration Corp.

MODEL:

AFL3-W15B-H81

Flat Bezel Panel PC with Intel® H81 Chipset, Touchscreen, Dual GbE LAN, Wi-Fi 802.11a/b/g/n/ac, Dual USB 3.0, 2-Megapixel Camera and IP 64 Compliant Front Panel

User Manual

Rev. 1.01 - March 1, 2017

RoHS Lead Free

Revision

Date	Version	Changes
March 1, 2017	1.01	Modified the brightness spec (page 6)
July 1, 2015	1.00	Initial release

Copyright

COPYRIGHT NOTICE

The information in this document is subject to change without prior notice in order to improve reliability, design and function and does not represent a commitment on the part of the manufacturer.

In no event will the manufacturer be liable for direct, indirect, special, incidental, or consequential damages arising out of the use or inability to use the product or documentation, even if advised of the possibility of such damages.

This document contains proprietary information protected by copyright. All rights are reserved. No part of this manual may be reproduced by any mechanical, electronic, or other means in any form without prior written permission of the manufacturer.

TRADEMARKS

All registered trademarks and product names mentioned herein are used for identification purposes only and may be trademarks and/or registered trademarks of their respective owners.

Manual Conventions

WARNING

Warnings appear where overlooked details may cause damage to the equipment or result in personal injury. Warnings should be taken seriously.

CAUTION

Cautionary messages should be heeded to help reduce the chance of losing data or damaging the product.

NOTE

These messages inform the reader of essential but non-critical information. These messages should be read carefully as any directions or instructions contained therein can help avoid making mistakes.

HOT SURFACE

This symbol indicates a hot surface that should not be touched without taking care.

Table of Contents

1 INTRODUCTION 1

1.1 OVERVIEW 2
1.2 MODEL VARIATIONS 2
1.3 FEATURES 3
1.4 FRONT PANEL 4
1.5 REAR PANEL 5
1.6 BOTTOM PANEL 5
1.7 SYSTEM SPECIFICATIONS 6
1.8 DIMENSIONS 9

2 UNPACKING 11

2.1 UNPACKING 12
2.2 PACKING LIST 13
2.3 OPTIONAL ITEMS 14

3 INSTALLATION 17

3.1 ANTI-STATIC PRECAUTIONS 18
3.2 INSTALLATION PRECAUTIONS 18
3.3 INSTALLATION AND CONFIGURATION STEPS 19
3.4 REMOVING THE BACK COVER 19
3.5 HDD INSTALLATION 20
3.6 MSATA MODULE INSTALLATION 22
3.7 COM1 DB-9 SERIAL PORT PIN 9 SELECTION 23
3.8 RS-232 OR RS-422/485 SELECTION FOR COM1 SERIAL PORT 24
3.9 RS-232, RS-422 OR RS-485 SELECTION FOR COM1 SERIAL PORT 25
3.10 CLEAR CMOS 26
3.11 AT/ATX MODE SELECTION 27
3.11.1 AT Power Mode 28
3.11.2 ATX Power Mode 28
3.12 MOUNTING THE SYSTEM 28
3.12.1 Wall Mounting 29

3.12.2 Panel Mounting *32*
3.12.3 Cabinet and Rack Installation *34*
3.12.4 Arm Mounting *38*
3.12.5 Stand Mounting *40*
3.13 POWERING ON THE SYSTEM 41
3.14 RESET THE SYSTEM 42
3.15 SOFTWARE INSTALLATION 42
3.15.1 Keypad AP *43*
3.15.2 Calibrating the Resistive Type Touchscreen *43*

4 BIOS SETUP 46

4.1 INTRODUCTION 47
4.1.1 Starting Setup *47*
4.1.2 Using Setup *47*
4.1.3 Getting Help *48*
4.1.4 Unable to Reboot after Configuration Changes *48*
4.1.5 BIOS Menu Bar *48*
4.2 MAIN 49
4.3 ADVANCED 50
4.3.1 ACPI Settings *51*
4.3.2 RTC Wake Settings *52*
4.3.3 CPU Configuration *53*
4.3.4 SATA Configuration *55*
4.3.5 Intel(R) Rapid Start Technology *56*
4.3.6 USB Configuration *57*
4.3.7 F81866 Super IO Configuration *58*
4.3.7.1 Serial Port n Configuration 59
4.3.7.1.1 Serial Port 1 Configuration 59
4.3.7.1.2 Serial Port 2 Configuration 60
4.3.7.1.3 Touch Configuration 61
4.3.8 F81866 H/W Monitor *62*
4.3.8.1 Smart Fan Mode Configuration 63
4.3.9 Serial Port Console Redirection *64*
4.3.9.1 Console Redirection Settings 65
4.3.10 iEi Feature *67*

4.4 CHIPSET 68
4.4.1 PCH-IO Configuration *69*
4.4.1.1 PCI Express Configuration 70
4.4.1.1.1 M_PCIE1/M-SATA and M_PCIE2 70
4.4.1.2 PCH Azalia Configuration 72
4.4.2 System Agent (SA) Configuration *73*
4.4.2.1 Graphics Configuration 74
4.4.2.1.1 LCD Control 75
4.4.2.2 Memory Configuration 76
4.5 BOOT 77
4.6 SECURITY 79
4.7 SAVE & EXIT 79

5 SYSTEM MAINTENANCE 81

5.1 SYSTEM MAINTENANCE INTRODUCTION 82
5.2 ANTI-STATIC PRECAUTIONS 82
5.3 TURN OFF THE POWER 83
5.4 SO-DIMM REPLACEMENT 83
5.5 WLAN CARD REPLACEMENT 84
5.6 REINSTALLING THE COVER 86

6 INTERFACE CONNECTORS 87

6.1 PERIPHERAL INTERFACE CONNECTORS 88
6.2 INTERNAL PERIPHERAL CONNECTORS 89
6.2.1 Battery Connector (BAT1) *90*
6.2.2 Digital I/O Connector (DIO1) *91*
6.2.3 Fan Connector (CPU_FAN1) *91*
6.2.4 Fan Connector (SYS_FAN1) *91*
6.2.5 Hotkey Connector (HOTKEY_CN1) *91*
6.2.6 Inverter Connector (INVERTER1) *92*
6.2.7 LVDS Connector (LVDS1) *92*
6.2.8 MCU Firmware Connector (JP8) *93*
6.2.9 Microphone Connector (DMIC1) *93*
6.2.10 PCIe Mini/mSATA Slot (M_PCIE1) *93*
6.2.11 PCIe Mini Slot (M_PCIE2) *94*

6.2.12 Power LED Connector (PW_LED1) *95*
6.2.13 Power Button Connector (PW_BT1) *95*
6.2.14 SATA Signal and Power Connector (SATA1) *96*
6.2.15 SMBus Connector (CN1) *96*
6.2.16 Speaker Connector (AUDIO_OUT1) *97*
6.2.17 SPI Flash Connector (JSPI1) *97*
6.2.18 TTL Serial Connector (NFC_COM4) *97*
6.2.19 USB Connector for Barcode Reader (BR_USB1) *98*
6.2.20 USB Connector for Bluetooth (BT_USB1) *98*
6.2.21 USB Connector for Camera (CAM_USB1) *98*
6.2.22 USB Connector for NFC (NFC_USB1) *99*
6.2.23 USB Connector for Touchscreen (TOUCH_USB1) *99*
6.2.24 VGA Connector (VGA_CON1) *99*
6.3 EXTERNAL INTERFACE PANEL CONNECTORS 100
6.3.1 GbE Connectors (LAN1 & LAN2) *100*
6.3.2 HDMI Connector (HDMI1) *101*
6.3.3 Power Connector (PWR1) *101*
6.3.4 RS-232 Serial Port (COM2) *101*
6.3.5 RS-232/422/485 DB-9 Serial Port (COM1) *102*
6.3.6 USB 2.0 Connectors (USB20_CN1) *102*
6.3.7 USB 2.0 Connectors (USB20_CN2) *102*
6.3.8 USB 3.0 Connectors (USB_CON1) *102*
6.4 PRECONFIGURED JUMPER SETTINGS 103
6.4.1 Flash Descriptor Security Override Jumper (J_FLASH1) *103*
6.4.2 LVDS Panel Voltage Selection Jumper (J_VLVDS1) *104*

A REGULATORY COMPLIANCE 105

B SAFETY PRECAUTIONS 110

B.1 SAFETY PRECAUTIONS 111
B.1.1 General Safety Precautions *111*
B.1.2 Anti-static Precautions *112*
B.1.3 Product Disposal *113*
B.2 MAINTENANCE AND CLEANING PRECAUTIONS 114
B.2.1 Maintenance and Cleaning *114*
B.2.2 Cleaning Tools *114*

C BIOS MENU OPTIONS 116

D WATCHDOG TIMER 119

E HAZARDOUS MATERIALS DISCLOSURE 122

List of Figures

Figure 1-1: AFL3-W15B-H81 Flat Bezel Panel PC....2
Figure 1-2: Front View....4
Figure 1-3: Rear View....5
Figure 1-4: Bottom Panel....6
Figure 1-5: AFL3-W15B-H81 Dimensions (mm)....9
Figure 1-6: AFL3-W15B-H81 with AFL3-2D-R10 Dimensions (mm)....10
Figure 3-1: AFL3-W15B-H81 Back Cover Retention Screws....19
Figure 3-2: Removing the Back Cover....20
Figure 3-3: HDD Bracket Retention Screws....21
Figure 3-4: HDD Retention Screws....21
Figure 3-5: HDD Installation....22
Figure 3-6: mSATA Slot Location....22
Figure 3-7: mSATA Module Installation....23
Figure 3-8: COM1 DB-9 Serial Port Pin 9 Setting Jumper Location....24
Figure 3-9: COM1_SEL1 Jumper Location....25
Figure 3-10: JP6 Jumper Location....26
Figure 3-11: Clear CMOS Jumper Location....27
Figure 3-12: AT/ATX Switch Location....27
Figure 3-13: Wall-mounting Bracket....29
Figure 3-14: Chassis Support Screws....31
Figure 3-15: Secure the Panel PC....31
Figure 3-16: AFL3-W15B-H81 Cutout Dimensions....32
Figure 3-17: Panel Mounting Kit Installation....33
Figure 3-18: Securing Panel Mounting Brackets....34
Figure 3-19: Rack/Cabinet Bracket Installation....35
Figure 3-20: Rack Mounting Kit Installation....36
Figure 3-21: Securing Rack Mounting Brackets....37
Figure 3-22: Install into a Rack/Cabinet....37
Figure 3-23: Arm Mounting Retention Screw Holes....39
Figure 3-24: Arm Mounting....39
Figure 3-25: Stand Mounting (Stand-A/Bxx)....40

Figure 3-26: Powering On the System 41
Figure 3-27: Reset Button Location 42
Figure 3-28: Keypad AP 43
Figure 3-29: Select Control Panel 43
Figure 3-30: Touchscreen Control Panel 44
Figure 3-31: Select Calibration Type 44
Figure 3-32: Calibration Window 45
Figure 5-1: SO-DIMM Module Locations 83
Figure 5-2: SO-DIMM Module Installation 84
Figure 5-3: WLAN Card Location 85
Figure 5-4: Releasing the WLAN Card 85
Figure 5-5: Removing the WLAN Card 86
Figure 6-1: Main Board Layout Diagram (Front Side) 88
Figure 6-2: Main Board Layout Diagram (Solder Side) 89

List of Tables

Table 1-1: Model Variations 3
Table 1-2: System Specifications 8
Table 3-1: COM1 DB-9 Serial Port Pin 9 Setting Jumper Settings 23
Table 3-2: COM1_SEL1 Jumper Settings 24
Table 3-3: JP6 Jumper Settings 25
Table 3-4: Clear CMOS Jumper Settings 26
Table 4-1: BIOS Navigation Keys 48
Table 6-1: Peripheral Interface Connectors 90
Table 6-2: Battery Connector (BAT1) Pinouts 90
Table 6-3: Digital I/O Connector (DIO1) Pinouts 91
Table 6-4: Fan Connector (CPU_FAN1) Pinouts 91
Table 6-5: Fan Connector (SYS_FAN1) Pinouts 91
Table 6-6: Hotkey Connector (HOTKEY_CN1) Pinouts 92
Table 6-7: Inverter Connector (INVERTER1) Pinouts 92
Table 6-8: LVDS Connector (LVDS1) Pinouts 93
Table 6-9: MCU Firmware Connector (JP8) Pinouts 93
Table 6-10: Microphone Connector (DMIC1) Pinouts 93
Table 6-11: PCIe Mini/mSATA Slot (M_PCIE1) Pinouts 94
Table 6-12: PCIe Mini Slot (M_PCIE2) Pinouts 95
Table 6-13: Power LED Connector (PW_LED1) Pinouts 95
Table 6-14: Power Button Connector (PW_BT1) Pinouts 95
Table 6-15: SATA Signal and Power Connector (SATA1) Pinouts 96
Table 6-16: SMBus Connector (CN1) Pinouts 96
Table 6-17: Speaker Connector (AUDIO_OUT1) Pinouts 97
Table 6-18: SPI Flash Connector (JSPI1) Pinouts 97
Table 6-19: TTL Serial Connector (NFC_COM4) Pinouts 97
Table 6-20: USB Connector for Barcode Reader (BR_USB1) Pinouts 98
Table 6-21: USB Connector for Bluetooth (BT_USB1) Pinouts 98
Table 6-22: USB Connector for Camera (CAM_USB1) Pinouts 98
Table 6-23: USB Connector for NFC (NFC_USB1) Pinouts 99
Table 6-24: USB Connector for Touchscreen (TOUCH_USB1) Pinouts 99

Table 6-25: VGA Connector (VGA_CON1) Pinouts 99
Table 6-26: Rear Panel Connectors 100
Table 6-27: GbE Connectors (LAN1 & LAN2) Pinouts 100
Table 6-28: HDMI Connector (HDMI1) Pinouts 101
Table 6-29: Power Connector (PWR1) Pinouts 101
Table 6-30: RS-232 DB-9 Serial Port (COM2) Pinouts 101
Table 6-31: RS-232/422/485 DB-9 Serial Port (COM1) Pinouts 102
Table 6-32: USB 2.0 Connectors (USB20_CN1) Pinouts 102
Table 6-33: USB 2.0 Connectors (USB20_CN2) Pinouts 102
Table 6-34: USB 3.0 Connectors (USB_CON1) Pinouts 103
Table 6-35: Preconfigured Jumpers 103
Table 6-36: Flash Descriptor Security Override Jumper (J_FLASH1) Settings 103
Table 6-37: LVDS Panel Voltage Selection Jumper (J_VLVDS1) Settings 104

List of BIOS Menus

BIOS Menu 1: Main 49
BIOS Menu 2: Advanced 50
BIOS Menu 3: ACPI Settings 51
BIOS Menu 4: RTC Wake Settings 52
BIOS Menu 5: CPU Configuration 53
BIOS Menu 6: SATA Configuration 55
BIOS Menu 7: Intel(R) Rapid Start Technology 56
BIOS Menu 8: USB Configuration 57
BIOS Menu 9: F81866 Super IO Configuration 58
BIOS Menu 10: Serial Port n Configuration Menu 59
BIOS Menu 11: F81866 H/W Monitor 62
BIOS Menu 12: Smart Fan Mode Configuration 63
BIOS Menu 13: Serial Port Console Redirection 64
BIOS Menu 14: Console Redirection Settings 65
BIOS Menu 15: iEi Feature 67
BIOS Menu 16: Chipset 68
BIOS Menu 17: PCH-IO Configuration 69
BIOS Menu 18: PCI Express Configuration 70
BIOS Menu 19: M_PCIE1/M-SATA and M_PCIE2 Configuration Menu 70
BIOS Menu 20: PCH Azalia Configuration 72
BIOS Menu 21: System Agent (SA) Configuration 73
BIOS Menu 22: Graphics Configuration 74
BIOS Menu 23: LCD Control 75
BIOS Menu 24: Memory Configuration 76
BIOS Menu 25: Boot 77
BIOS Menu 26: Security 79
BIOS Menu 27: Save & Exit 80

Chapter

1

Introduction

1.1 Overview

Figure 1-1: AFL3-W15B-H81 Flat Bezel Panel PC

The AFL3-W15B-H81 is a light industrial interactive panel PC with Intel® H81 chipset, providing optimal memory, graphics, and peripheral I/O support. The system comes with 4 GB of DDR3 SO-DIMM memory that can ensure smooth data throughputs with reduced bottlenecks and fast system access. In addition, the flat-bezel design is ideal for easy and simplified integration into various applications.

One HDMI output, two serial ports, two USB 3.0 ports and four USB 2.0 ports allow simplified connectivity to a variety of external peripheral devices. Furthermore, Wi-Fi capabilities and two RJ-45 GbE connectors provide the system with smooth connection to an external LAN.

1.2 Model Variations

The model numbers and model variations are listed below.

Model	CPU	Touchscreen
AFL3-W15B-H81-P/R/4G-R10	Intel® Pentium® G3320TE (dual-core, 2.3 GHz, max. TDP=35 W)	5-wire resistive type
AFL3-W15B-H81-i3/R/4G-R10	Intel® Core™ i3-4330TE (dual-core, 2.4 GHz, max. TDP=35 W)	5-wire resistive type
AFL3-W15B-H81-i5/R/4G-R10	Intel® Core™ i5-4570TE (dual-core, 2.7 GHz, max. TDP=35 W)	5-wire resistive type

Model	CPU	Touchscreen
AFL3-W15B-H81-P/PC/4G-R10	Intel® Pentium® G3320TE (dual-core, 2.3 GHz, max. TDP=35 W)	Projected capacitive type
AFL3-W15B-H81-i3/PC/4G-R10	Intel® Core™ i3-4330TE (dual-core, 2.4 GHz, max. TDP=35 W)	Projected capacitive type
AFL3-W15B-H81-i5/PC/4G-R10	Intel® Core™ i5-4570TE (dual-core, 2.7 GHz, max. TDP=35 W)	Projected capacitive type

Table 1-1: Model Variations

1.3 Features

The AFL3-W15B-H81 features are listed below:

- Flat-bezel LCD with LED backlight
- Intel® Core™ i5-4570TE/Core™ i3-4330TE/Pentium® G3320TE processor
- Preinstalled with 4 GB of DDR3 memory (system max. 8 GB)
- 5-wire resistive type or projected capacitive type touchscreen
- 9 V ~ 30 V wide range DC power input
- Wi-Fi 802.11a/b/g/n/ac high speed wireless
- Two PCIe GbE RJ-45 connectors
- Two 3 W speakers
- Four USB 2.0 ports and two USB 3.0 ports
- One RS-232 and one RS-232/422/485 serial ports
- One HDMI output
- Optional barcode scanner
- Optional RFID reader
- Optional magnetic stripe card reader
- IP 64 compliant front panel

1.4 Front Panel

The front side of the AFL3-W15B-H81 is a flat-bezel panel with a TFT LCD screen surrounded by a PC+ABS plastic frame (**Figure 1-2**).

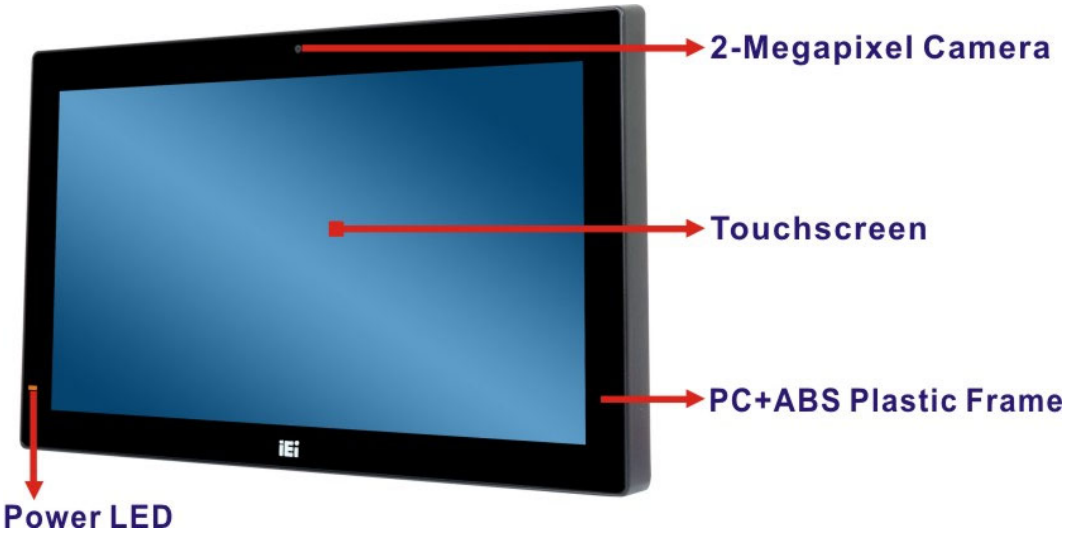

Figure 1-2: Front View

There is a power LED indicator located on the front panel. The status descriptions of the power LED indicator are listed below.

- **Off:** Power cord not attached or power supply failure
- **Solid amber:** The system is connected to a power source and is ready to be turned on.
- **Solid green:** The system is turned on.

1.5 Rear Panel

The rear panel provides access to retention screw holes that support VESA mounting. See **Figure 1-3**.

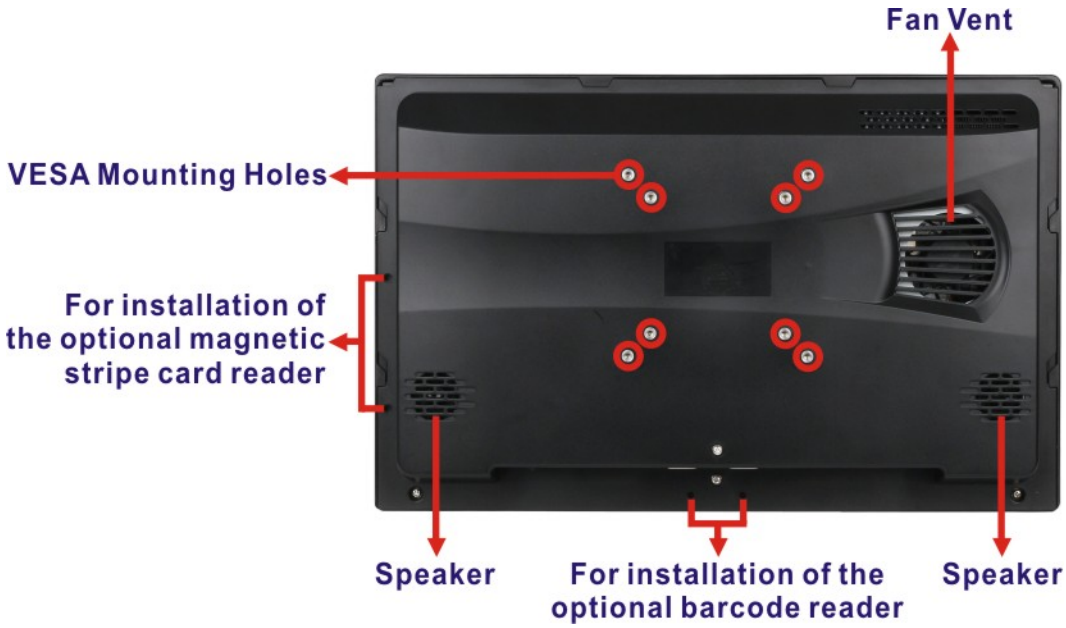

Figure 1-3: Rear View

1.6 Bottom Panel

The bottom panel of the AFL3-W15B-H81 has the following I/O interfaces (**Figure 1-4**):

- 1 x 9 V ~ 30 V DC power input connector, 4-pin
- 1 x AT/ATX switch
- 1 x Audio line-out jack
- 1 x Digital microphone
- 2 x GbE RJ-45 connectors
- 1 x HDMI output connector
- 1 x Power switch
- 1 x Reset button
- 1 x RS-232 DB-9 connector (COM2)
- 1 x RS-232/422/485 DB-9 connector (COM1)
- 4 x USB 2.0 connectors
- 2 x USB 3.0 connectors

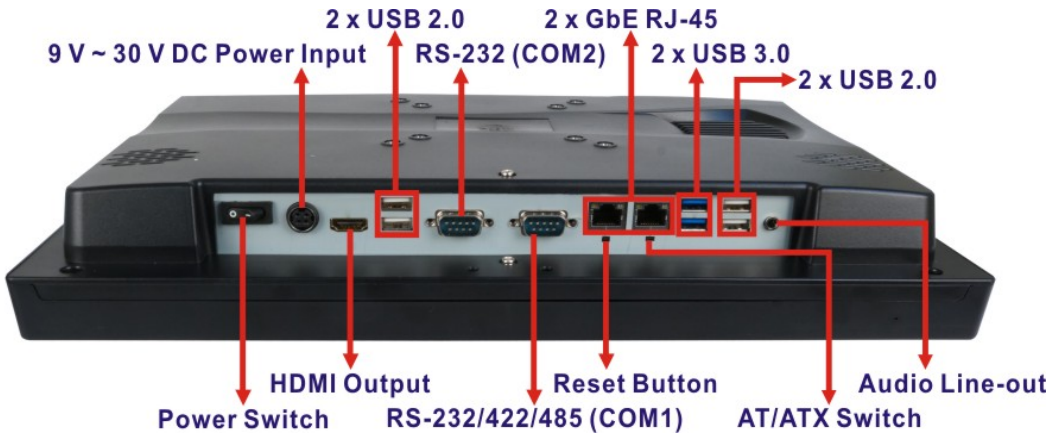

Figure 1-4: Bottom Panel

1.7 System Specifications

The technical specifications for the AFL3-W15B-H81 systems are listed in **Table 1-2**.

Specifications	AFL3-W15B-H81
LCD Size	15.6”
Max. Resolution	1366 x 768 (16:9)
Brightness (cd/m^2)	400
Contrast Ratio	700:1
LCD Color	262K
Pixel Pitch (mm)	0.240 (H) x 0.240 (V)
Viewing Angle (H-V)	160° / 160°
Backlight	LED backlight (MTBF: 50,000 hrs)
Touchscreen	5-wire resistive type with RS-232 interface or projected capacitive type with USB interface
Touch Controller	Resistive type: PenMount DMC9000 Projected capacitive type: EETI EXC7200

CPU	Intel® Core™ i5-4570TE/Core™ i3-4330TE/ Pentium® G3320TE processor (max. TDP=35 W)
Memory	Two 204-pin 1333 MHz single-channel DDR3 SO-DIMM slots (system max. 8 GB) Preinstalled with 4 GB of DDR3 memory
Ethernet	Two Realtek RTL8111E PCIe GbE controllers
Storage	One PCIe Mini slot, supporting mSATA module installation One 2.5” SATA 3Gb/s HDD bay
Audio	Realtek ALC892 HD Audio codec
Speaker	Two 3 W internal speakers
Microphone	Digital microphone
Camera	2-megapixel with low light function
Wireless	One 802.11a/b/g/n/ac wireless LAN module (half-size PCIe Mini card)
Bluetooth	Bluetooth v4.0
RFID Reader	MIFARE 13.56 MHz card reader (optional)
Card Reader	Magnetic stripe card reader (optional)
OSD Function	Controlled by OSD software
Thermal Solution	Smart fan
Front Panel Construction Material	PC+ABS plastic
Mounting	VESA 75 mm x 75 mm or 100 mm x 100 mm (panel, wall, rack, stand or arm mounting)
Color	Black C
Net Weight	3581 g
Dimensions (W x H x D)	396 mm x 250 mm x 59 mm

Cut-out Dimensions (W x H)	369 mm x 226 mm
Operating Temperature	-20ºC ~ 50ºC (ambient with air flow)
Storage Temperature	-20ºC ~ 60ºC
Humidity	10% ~ 95% (non-condensing)
IP Level	IP 64 compliant front panel
Power Supply	96 W power adapter Input: 90 V AC ~ 264 V AC @ 50 Hz/ 60 Hz Output: 12 V DC
Power Requirement	9 V ~ 30 V DC
Power Consumption	12 V @ 6.33 A (Intel® Pentium® G3320TE CPU with 4 GB 1333 MHz DDR3 memory)
Safety/EMC	CE, FCC
I/O Ports and Switches	1 x 9 V ~ 30 V DC power input connector, 4-pin 1 x AT/ATX switch 1 x Audio line-out port 2 x GbE LAN (RJ-45 connector) 1 x HDMI output connector 1 x Power switch 1 x Reset button 1 x RS-232 serial port (DB-9 connector) 1 x RS-232/422/485 serial port (DB-9 connector) 4 x USB 2.0 connectors 2 x USB 3.0 connectors

Table 1-2: System Specifications

1.8 Dimensions

The AFL3-W15B-H81 dimensions are shown below.

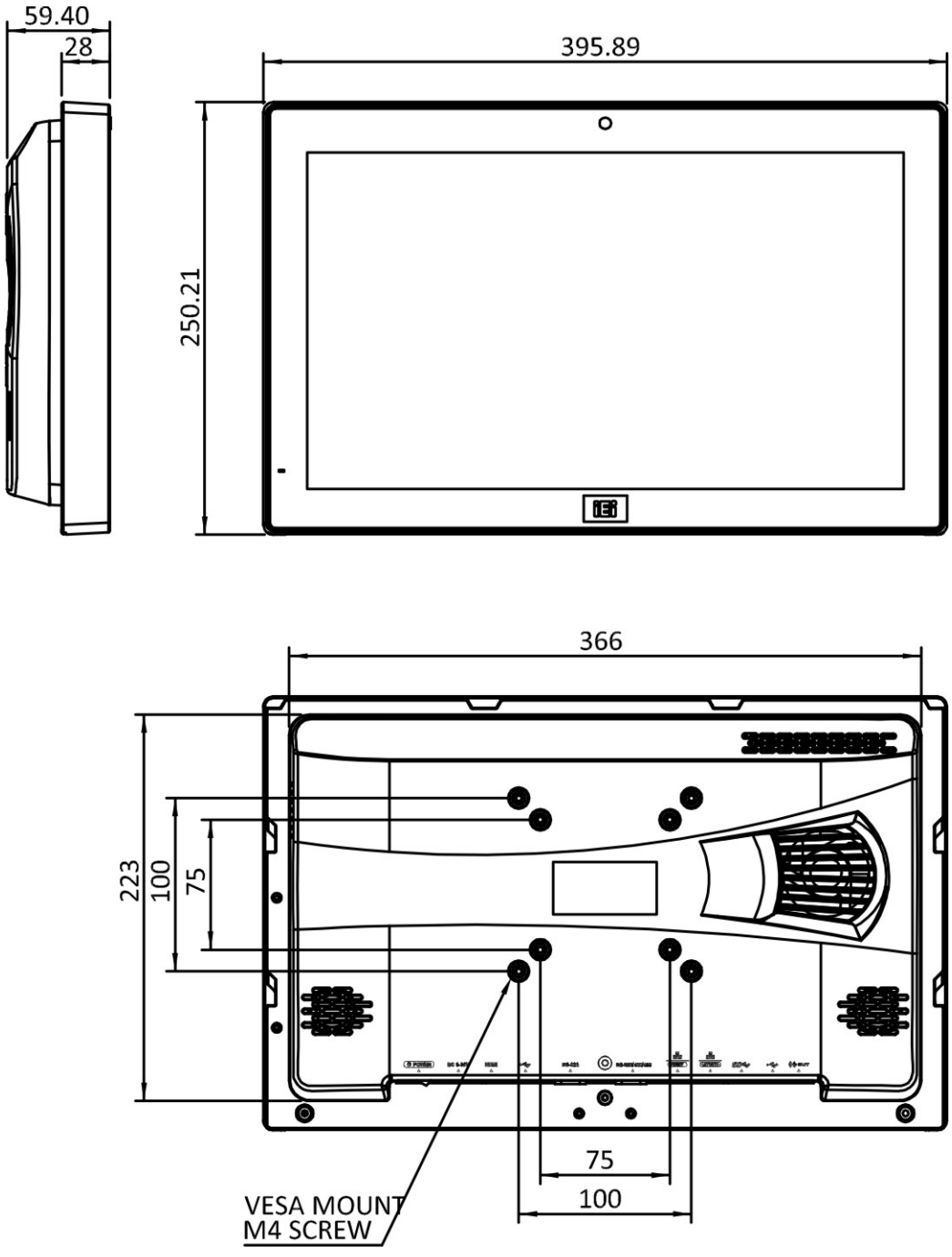

Figure 1-5: AFL3-W15B-H81 Dimensions (mm)

The dimensions of AFL3-W15B-H81 with AFL3-2D-R10 (optional barcode reader) are shown below.

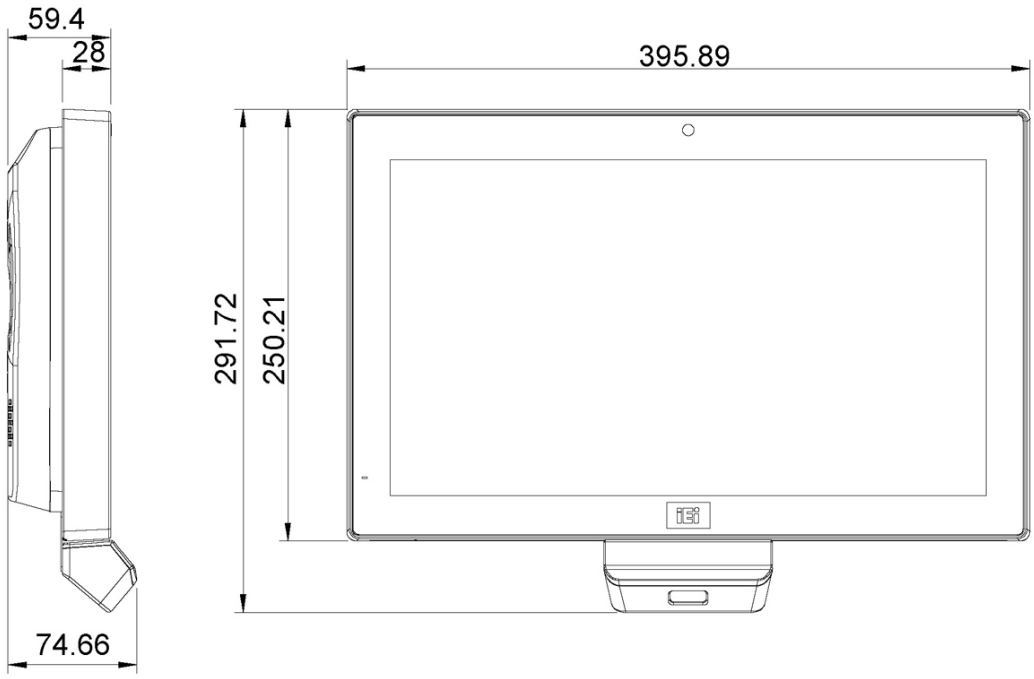

Figure 1-6: AFL3-W15B-H81 with AFL3-2D-R10 Dimensions (mm)

Chapter

2

Unpacking

2.1 Unpacking

To unpack the flat bezel panel PC, follow the steps below:

WARNING!

The front side LCD screen has a protective plastic cover stuck to the screen. Only remove the plastic cover after the flat bezel panel PC has been properly installed. This ensures the screen is protected during the installation process.

Step 1: Use box cutters, a knife or a sharp pair of scissors that seals the top side of the external (second) box.

Step 2: Open the external (second) box.

Step 3: Use box cutters, a knife or a sharp pair of scissors that seals the top side of the internal (first) box.

Step 4: Lift the monitor out of the boxes.

Step 5: Remove both polystyrene ends, one from each side.

Step 6: Pull the plastic cover off the flat bezel panel PC.

Step 7: Make sure all the components listed in the packing list are present.

2.2 Packing List

NOTE:

If any of the components listed in the checklist below are missing, do not proceed with the installation. Contact the IEI reseller or vendor the AFL3-W15B-H81 was purchased from or contact an IEI sales representative directly by sending an email to sales@ieiworld.com.

The AFL3-W15B-H81 flat bezel panel PC is shipped with the following components:

Quantity	Item	Image
1	AFL3-W15B-H81 panel PC	
1	Power adapter (96 W) (**P/N**: 63040-010096-100-RS)	
1	Power cord (**P/N**: 32702-000200-100-RS)	
4	Pan head machine screw (**P/N**: 44403-040061-RS)	
2	Fixed holder (**P/N**: 46003-009500-RS)	
1	Touch pen (resistive type models only) (**P/N**: 43125-0002C0-00-RS)	
1	Utility CD	

1	One Key Recovery CD	

2.3 Optional Items

The following are optional components which may be separately purchased:

Item and Part Number	Image
Wall mounting kit (**P/N**: AFLWK-19B)	
Panel mounting kit (**P/N**: AFL3PK-W07A-R10)	
Rack mounting kit (**P/N**: AFL3RK-W15B-R10)	
Arm (**P/N**: ARM-11-RS)	
Arm (**P/N**: ARM-31-RS)	

Item and Part Number	Image
Stand (**P/N**: STAND-A21-R10)	
Stand (**P/N**: STAND-210-R11)	
Stand (**P/N**: STAND-A19-RS)	
Stand (**P/N**: STAND-C19-R10)	
Barcode scanner (**P/N**: AFL3-2D-R10)	
Magnetic stripe card reader (**P/N**: AFL3P-12MSR-U-R10)	
RFID reader, 13.56 MHz Mifare type (IEI ATO only) (**P/N**: AFL3-MF-RFID-KIT02-R10)	
OS: Windows 7 Embedded (for projected capacitive touchscreen) (**P/N**: AFL3-W15B-H81-WES7P64-R10)	

Item and Part Number	Image
OS: Windows 7 Embedded (for resistive touchscreen) (**P/N**: AFL3-W15B-H81-WES7E64-R10)	
OS: Windows 8 Embedded (**P/N**: AFL3-W15B-H81-WE8S-R10)	

Chapter

3

Installation

3.1 Anti-static Precautions

WARNING:

Failure to take ESD precautions during the maintenance of the AFL3-W15B-H81 may result in permanent damage to the AFL3-W15B-H81 and severe injury to the user.

Electrostatic discharge (ESD) can cause serious damage to electronic components, including the AFL3-W15B-H81. Dry climates are especially susceptible to ESD. It is therefore critical that whenever the AFL3-W15B-H81 is accessed internally, or any other electrical component is handled, the following anti-static precautions are strictly adhered to.

- ***Wear an anti-static wristband***: Wearing a simple anti-static wristband can help to prevent ESD from damaging the board.
- ***Self-grounding***: Before handling the board touch any grounded conducting material. During the time the board is handled, frequently touch any conducting materials that are connected to the ground.
- ***Use an anti-static pad***: When configuring the AFL3-W15B-H81, place it on an anti-static pad. This reduces the possibility of ESD damaging the AFL3-W15B-H81.
- ***Only handle the edges of the PCB***: When handling the PCB, hold the PCB by the edges.

3.2 Installation Precautions

When installing the flat bezel panel PC, please follow the precautions listed below:

- **Power turned off**: When installing the flat bezel panel PC, make sure the power is off. Failing to turn off the power may cause severe injury to the body and/or damage to the system.
- **Certified Engineers**: Only certified engineers should install and modify onboard functionalities.

- **Anti-static Discharge**: If a user open the rear panel of the flat bezel panel PC, to configure the jumpers or plug in added peripheral devices, ground themselves first and wear an anti-static wristband.

3.3 Installation and Configuration Steps

The following installation steps must be followed.

Step 1: Unpack the flat bezel panel PC.

Step 2: Install a hard disk drive or mSATA module.

Step 3: Configure the system.

Step 4: Connect peripheral devices to the flat bezel panel PC.

Step 5: Mount the flat bezel panel PC.

3.4 Removing the Back Cover

To access the AFL3-W15B-H81 internally, the back cover must be removed. To remove the back cover, please follow the steps below.

Step 1: Remove the four retention screws from the back cover.

Figure 3-1: AFL3-W15B-H81 Back Cover Retention Screws

Step 2: Slide the back cover toward the I/O panel until it is disengaged from the locking mechanism. Then, lift the back cover off the chassis.

Figure 3-2: Removing the Back Cover

Step 3: To install the back cover, slide the back cover toward the top cover until the external and internal locking mechanisms are both clipped into place. Then, secure the back cover with the previously removed screws.

WARNING:

Over-tightening back cover screws will crack the plastic frame. Maximum torque for cover screws is 5 kg-cm (0.36 lb-ft/0.49 Nm).

3.5 HDD Installation

To install the HDD into the AFL3-W15B-H81, please follow the steps below:

Step 1: Remove the back cover. Refer to **Section 3.4**.

Step 2: Remove the four HDD bracket retention screws and lift the HDD bracket off the panel PC.

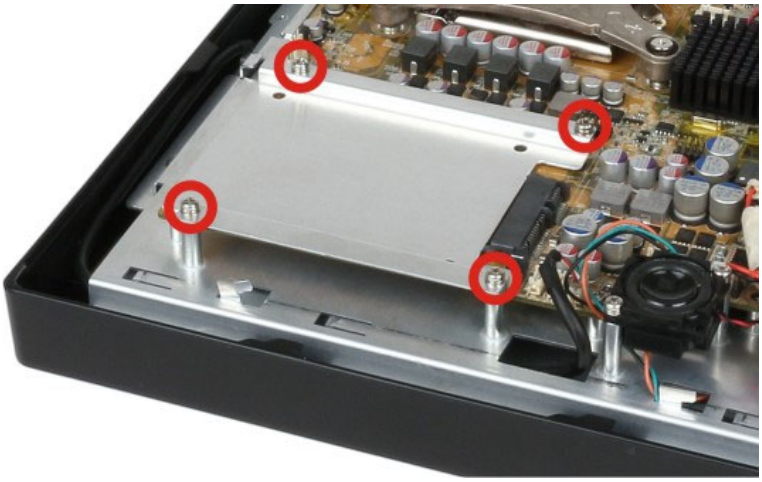

Figure 3-3: HDD Bracket Retention Screws

Step 3: Attach the HDD brackets to the HDD. To do this, align the four retention screw holes from the bottom of the HDD bracket with the retention screw holes on bottom of the HDD. Insert four retention screws into the HDD bracket (**Figure 3-4**).

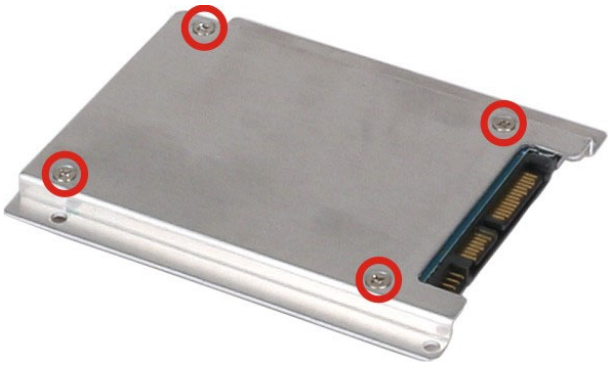

Figure 3-4: HDD Retention Screws

Step 4: Align the SATA connector on the rear of HDD with the SATA connector on the motherboard, and then slide the HDD until it is connected to the SATA connector on the motherboard (**Figure 3-5**).

Step 5: Reinstall the four HDD bracket retention screws to secure the HDD bracket to the panel PC (**Figure 3-5**).

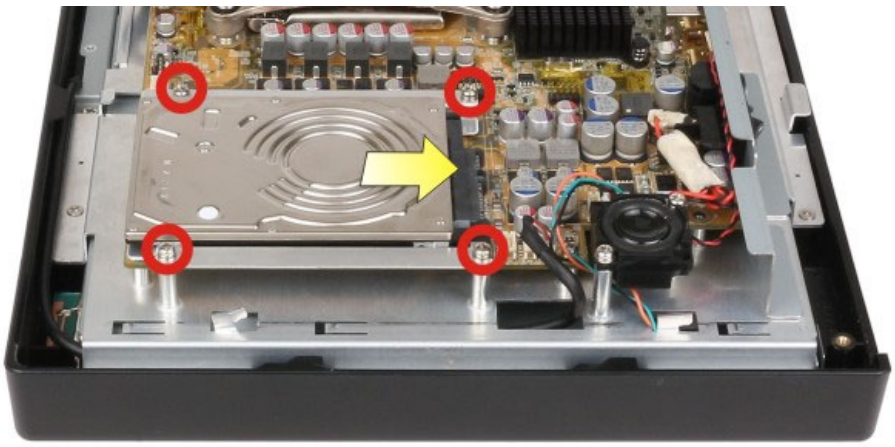

Figure 3-5: HDD Installation

Step 6: Replace the back cover.

3.6 mSATA Module Installation

To install an mSATA module into the AFL3-W15B-H81, please follow the steps below:

Step 1: Remove the back cover. Refer to **Section 3.4**.

Step 2: Locate the mSATA slot (**M_PCIE1**) on the motherboard. Remove the preinstalled retention screw on the screw pillar of the PCIe Mini slot as shown in (**Figure 3-6**).

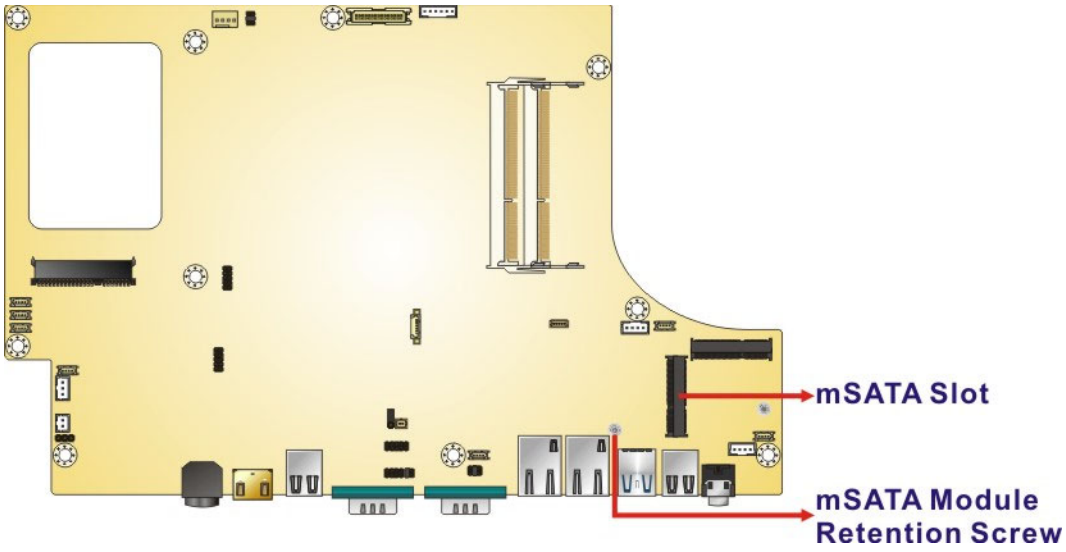

Figure 3-6: mSATA Slot Location

Step 3: Line up the notch on the mSATA module with the notch on the connector. Slide the mSATA module into the socket at an angle of about 20º (**Figure 3-7**).

Step 4: Press the other end of the mSATA module down and secure the module with the previously removed retention screw (**Figure 3-7**).

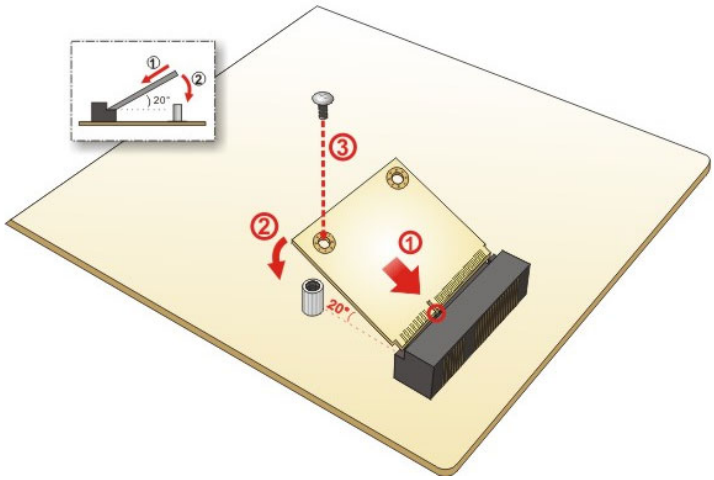

Figure 3-7: mSATA Module Installation

Step 5: Replace the back cover.

3.7 COM1 DB-9 Serial Port Pin 9 Selection

The JP5 jumper configures pin 9 on the COM1 serial port. Pin 9 on the COM1 DB-9 connector can be set as the ring (RI) signal, +5 V or +12 V. The jumper selection options are shown in **Table 3-1**.

NOTE:

The user can select only one of the settings in **Table 3-1** at a time.

JP5	Description
Short 1-2	COM1 RI Pin use +12 V
Short 3-4	COM1 RI Pin use RI (Default)
Short 5-6	COM1 RI Pin use +5 V

Table 3-1: COM1 DB-9 Serial Port Pin 9 Setting Jumper Settings

The COM1 DB-9 serial port pin 9 setting jumper location is shown in **Figure 3-8** below.

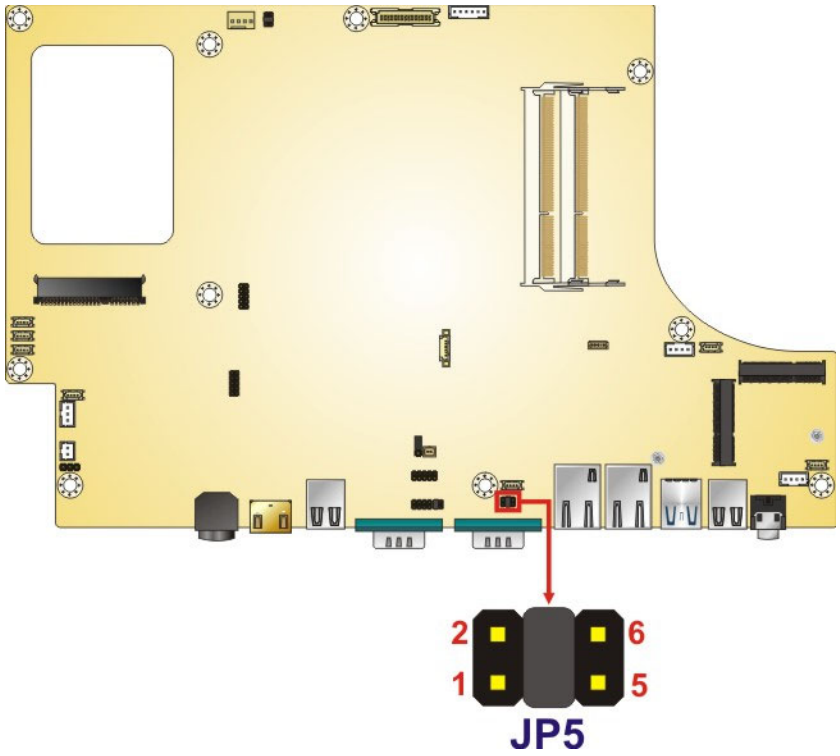

Figure 3-8: COM1 DB-9 Serial Port Pin 9 Setting Jumper Location

3.8 RS-232 or RS-422/485 Selection for COM1 Serial Port

The COM1_SEL1 jumper sets the communication protocol used by the COM1 serial communications port as RS-232 or RS-422/485. The jumper selection options are shown in **Table 3-2**.

NOTE:

The **Device Mode** BIOS option in the **Serial Port 1 Configuration** menu should have the same settings as set in the COM1_SEL1 jumper.

COM_SEL1	Description
Open 1-2, 3-4, 5-6 & 7-8	RS-232 (Default)
Short 1-2, 3-4, 5-6 & 7-8	RS-422/485

Table 3-2: COM1_SEL1 Jumper Settings

The COM1_SEL1 jumper location is shown in **Figure 3-9**.

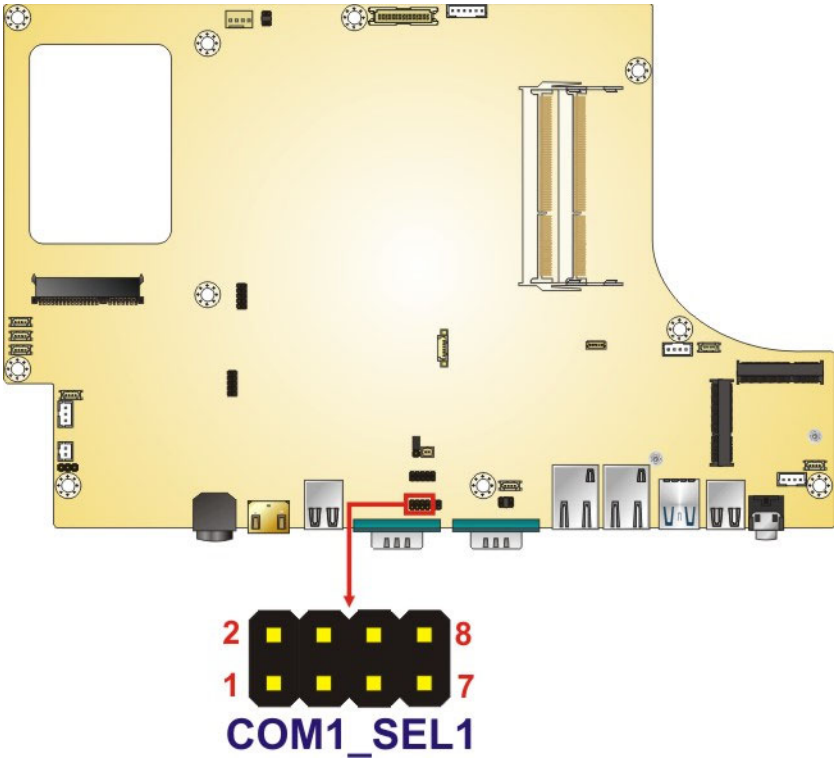

Figure 3-9: COM1_SEL1 Jumper Location

3.9 RS-232, RS-422 or RS-485 Selection for COM1 Serial Port

The JP6 jumper sets the communication protocol used by the COM1 serial communication port as RS-232, RS-422 or RS-485. The jumper selection options are shown in **Table 3-3**.

COM_SEL1	Description
Short 1-2 & 3-4	RS-422
Short 1-2, open 3-4	RS-232 (Default)
Short 3-4, open 1-2	RS-485

Table 3-3: JP6 Jumper Settings

The JP6 jumper location is shown in **Figure 3-10**.

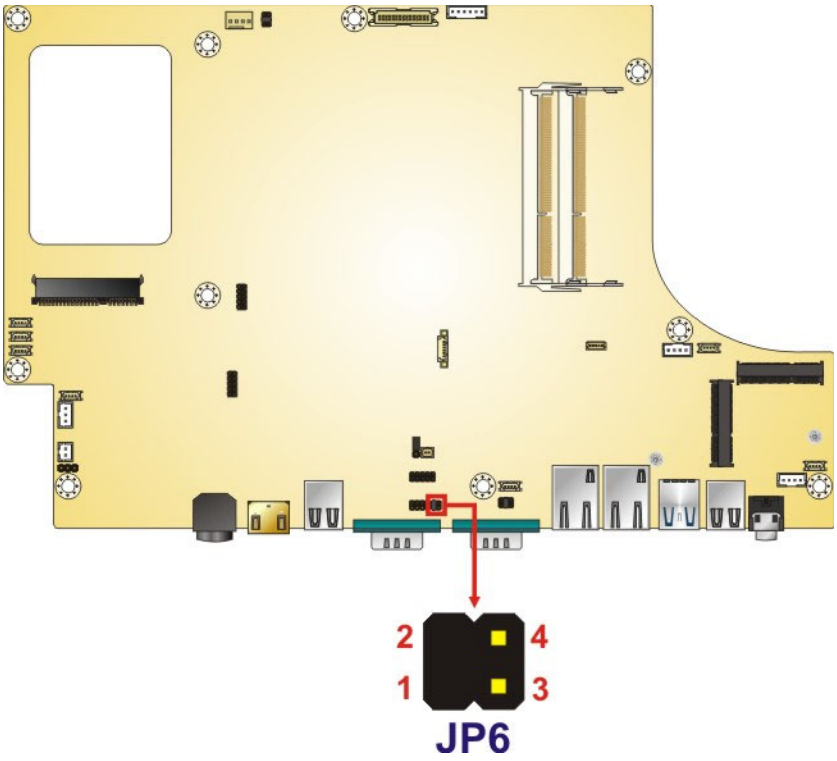

Figure 3-10: JP6 Jumper Location

3.10 Clear CMOS

If the AFL3-W15B-H81 fails to boot due to improper BIOS settings, the clear CMOS jumper clears the CMOS data and resets the system BIOS information. To reset the BIOS, move the jumper to the "Clear CMOS" position for 3 seconds or more, and then move back to the default position.

Setting	Description
Short 1-2	Normal operation (Default)
Short 2-3	Clear CMOS

Table 3-4: Clear CMOS Jumper Settings

The clear CMOS jumper location is shown in **Figure 3-11**.

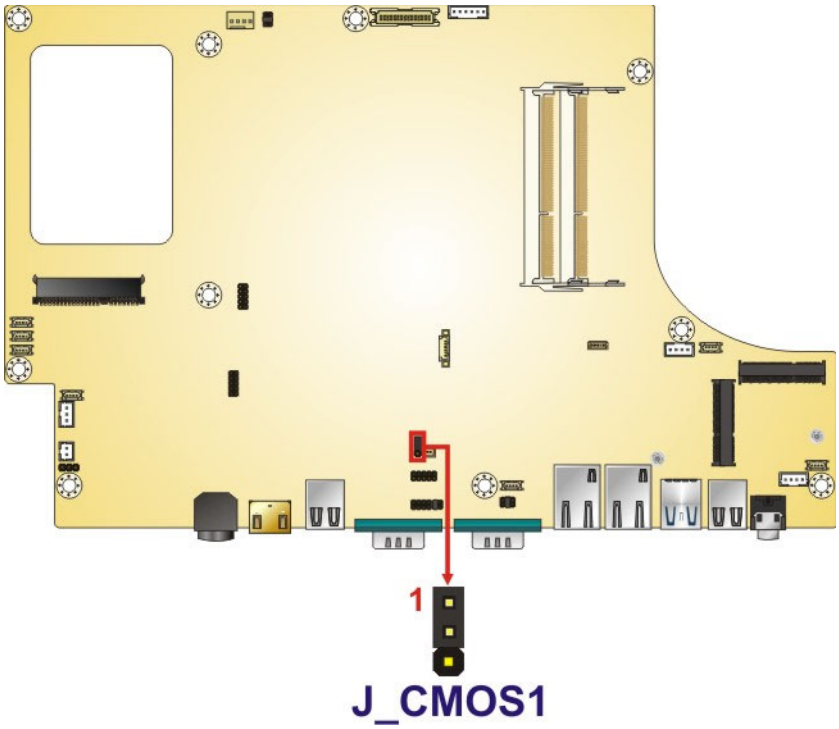

Figure 3-11: Clear CMOS Jumper Location

3.11 AT/ATX Mode Selection

AT or ATX power mode can be used on the AFL3-W15B-H81. The selection is made through an AT/ATX switch located on the bottom panel (**Figure 3-12**).

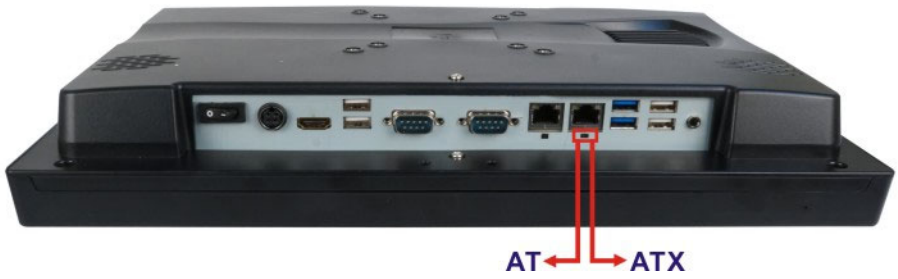

Figure 3-12: AT/ATX Switch Location

3.11.1 AT Power Mode

With the AT mode selected, the power is controlled by a central power unit rather than a power switch. The AFL3-W15B-H81 panel PC turns on automatically when the power is connected. The AT mode benefits a production line to control multiple panel PCs from a central management center and other applications including:

- ATM
- Self-service kiosk
- Plant environment monitoring system
- Factory automation platform
- Manufacturing shop flow

3.11.2 ATX Power Mode

With the ATX mode selected, the AFL3-W15B-H81 panel PC goes in a standby mode when it is turned off. The panel PC can be easily turned on via network or a power switch in standby mode. Remote power control is perfect for advertising applications since the broadcasting time for each panel PC can be set individually and controlled remotely. Other possible application includes

- Security surveillance
- Point-of-Sale (POS)
- Advertising terminal

3.12 Mounting the System

The mounting methods for the AFL3-W15B-H81 are listed below.

- Wall mounting
- Panel mounting
- Rack mounting
- Arm mounting
- Stand mounting

The mounting methods are described below.

3.12.1 Wall Mounting

To mount the flat bezel panel PC onto the wall, please follow the steps below.

Step 1: Select the location on the wall for the wall-mounting bracket.

Step 2: Carefully mark the locations of the four screw holes in the bracket on the wall.

Step 3: Drill four pilot holes at the marked locations on the wall for the bracket retention screws.

Step 4: Align the wall-mounting bracket screw holes with the pilot holes.

Step 5: Secure the mounting-bracket to the wall by inserting the retention screws into the four pilot holes and tightening them (**Figure 3-13**).

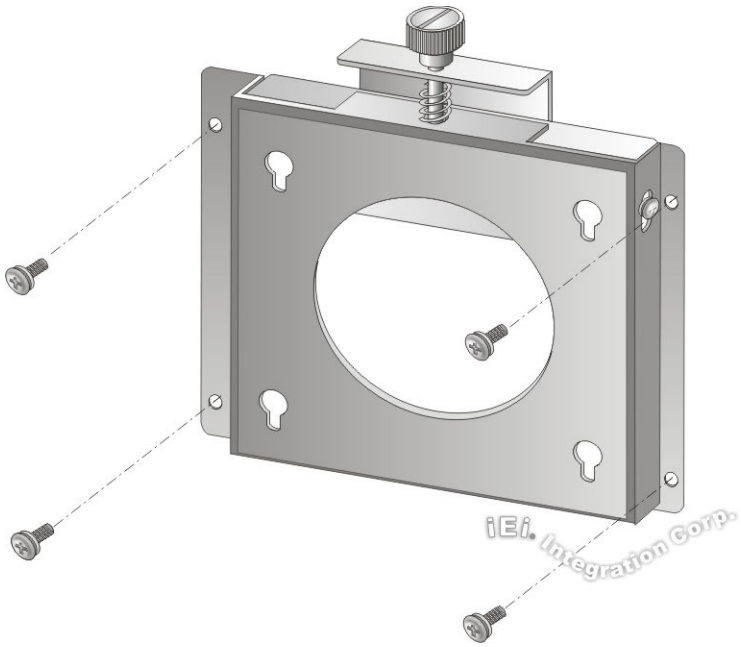

Figure 3-13: Wall-mounting Bracket

Step 6: Insert the four monitor mounting screws provided in the wall mount kit into the four screw holes on the real panel of the flat bezel panel PC and tighten until the screw shank is secured against the rear panel (**Figure 3-14**).

WARNING:

Please use the M4 screws provided in the wall mount kit for the rear panel. If the screw is missing, the thread depth of the replacement screw should be not more than 4 mm.

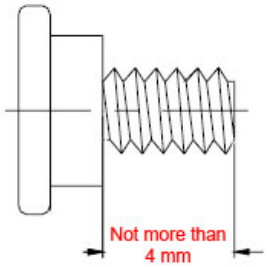

Step 7: Align the mounting screws on the monitor rear panel with the mounting holes on the bracket.

Step 8: Carefully insert the screws through the holes and gently pull the monitor downwards until the monitor rests securely in the slotted holes (**Figure 3-14**). Ensure that all four of the mounting screws fit snugly into their respective slotted holes.

NOTE:

In the diagram below the bracket is already installed on the wall.

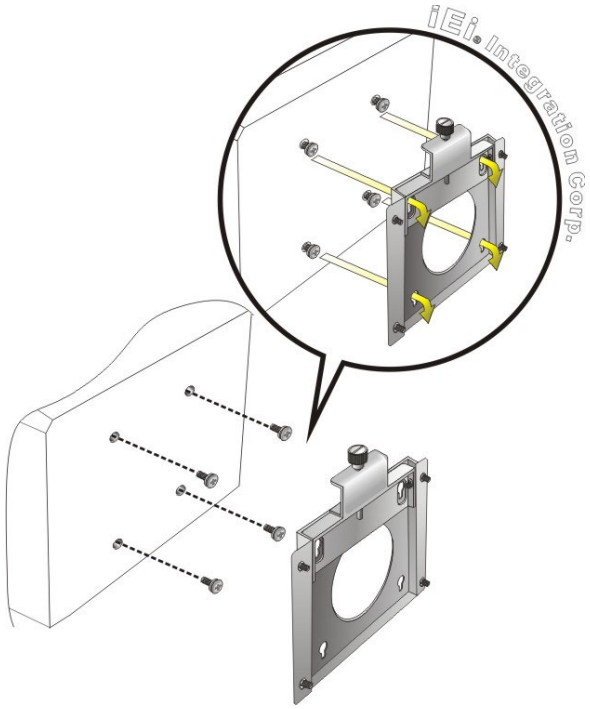

Figure 3-14: Chassis Support Screws

Step 9: Secure the panel PC by fastening the retention screw of the wall-mounting bracket (**Figure 3-15**).

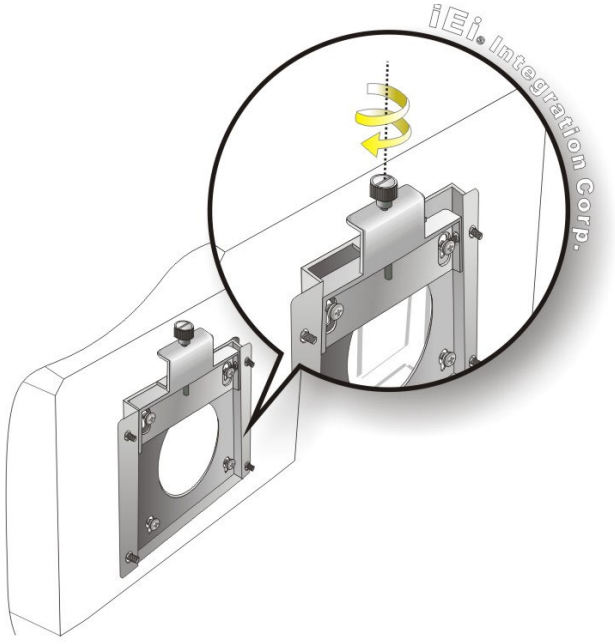

Figure 3-15: Secure the Panel PC

3.12.2 Panel Mounting

To mount the AFL3-W15B-H81 flat bezel panel PC into a panel, please follow the steps below.

Step 1: Select the position on the panel to mount the flat bezel panel PC.

Step 2: Cut out a section corresponding to the size shown below. The size must be smaller then the outer edge.

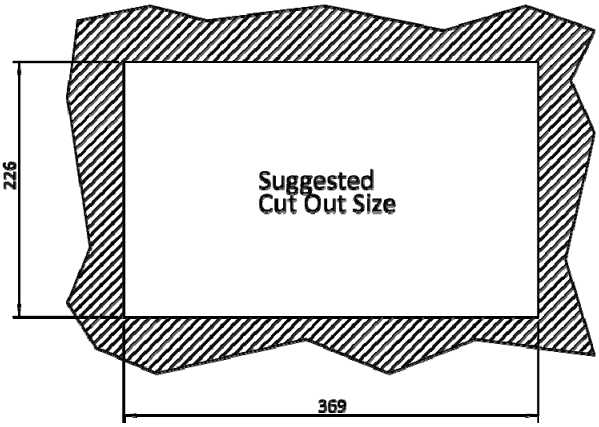

Figure 3-16: AFL3-W15B-H81 Cutout Dimensions

Step 3: Slide the flat bezel panel PC through the hole until the frame is flush against the panel.

Step 4: Insert a M5*50 screw into the screw hole on the side of the panel mounting bracket. Then, install the following components onto the screw in sequence. See **Figure 3-17**.

Sequence	Item	Photo	Instruction
1	Spring		Install a spring onto the screw.
2	Nut		Tighten a nut until the spring is compressed enough for plastic cap.
3	Plastic cap		Tighten a plastic cap onto the end of screw thread.

Step 5: Repeat **Step 4** to install the other three screws into the sides of the two panel mounting brackets.

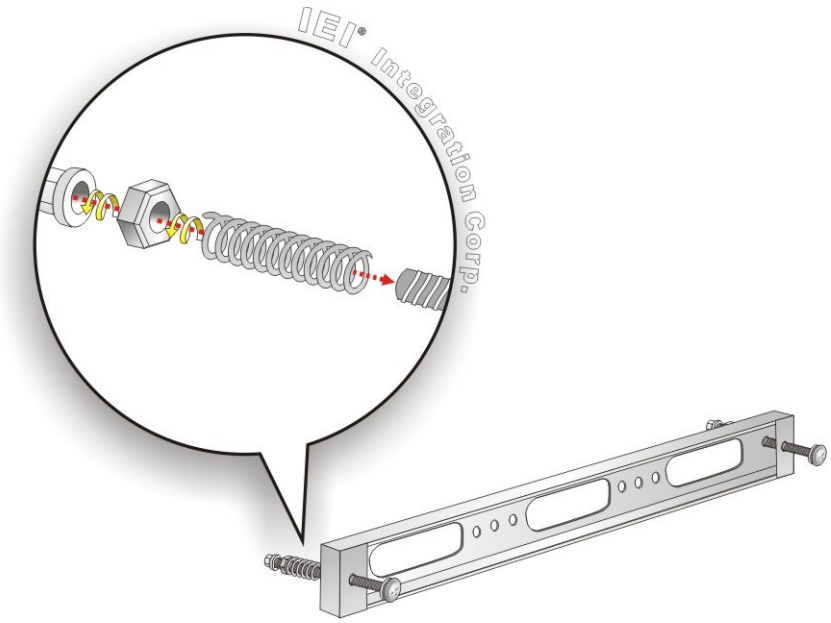

Figure 3-17: Panel Mounting Kit Installation

Step 6: Align the panel mounting bracket screw holes with the VESA mounting holes on the rear of the panel PC.

Step 7: Secure the two panel mounting brackets to the rear of the panel PC by inserting the four retention screws into the VESA mounting holes and tightening them (**Figure 3-18**).

NOTE:

The panel mounting kit described in this section is an optional item. To purchase it, please contact an IEI sales representative.

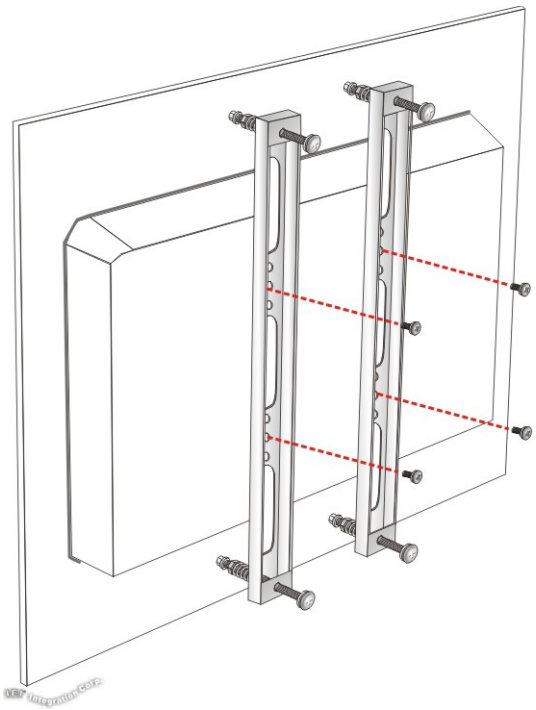

Figure 3-18: Securing Panel Mounting Brackets

3.12.3 Cabinet and Rack Installation

The AFL3-W15B-H81 flat bezel panel PC can be installed into a cabinet or rack. The installation procedures are similar to the panel mounting installation. To do this, please follow the steps below:

NOTE:

When purchasing the cabinet/rack installation bracket, make sure it is compatible with both the AFL3-W15B-H81 flat bezel panel PC and the rack/cabinet into which the AFL3-W15B-H81 is installed.

Step 1: Slide the rear chassis of the AFL3-W15B-H81 flat bezel panel PC through the rack/cabinet bracket until the frame is flush against the front of the bracket (**Figure 3-19**).

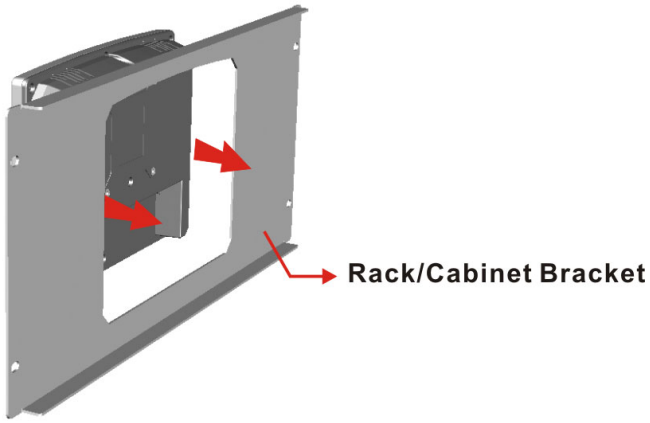

Figure 3-19: Rack/Cabinet Bracket Installation

Step 2: Insert a M5*50 screw into the screw hole on the side of the rack mounting bracket. Then, install the following components onto the screw in sequence. See **Figure 3-20**.

Sequence	Item	Photo	Instruction
1	Spring		Install a spring onto the screw.
2	Nut		Tighten a nut until the spring is compressed enough for plastic cap.
3	Plastic cap		Tighten a plastic cap onto the end of screw thread.

Step 3: Repeat **Step 4** to install the other three screws into the sides of the two rack mounting brackets.

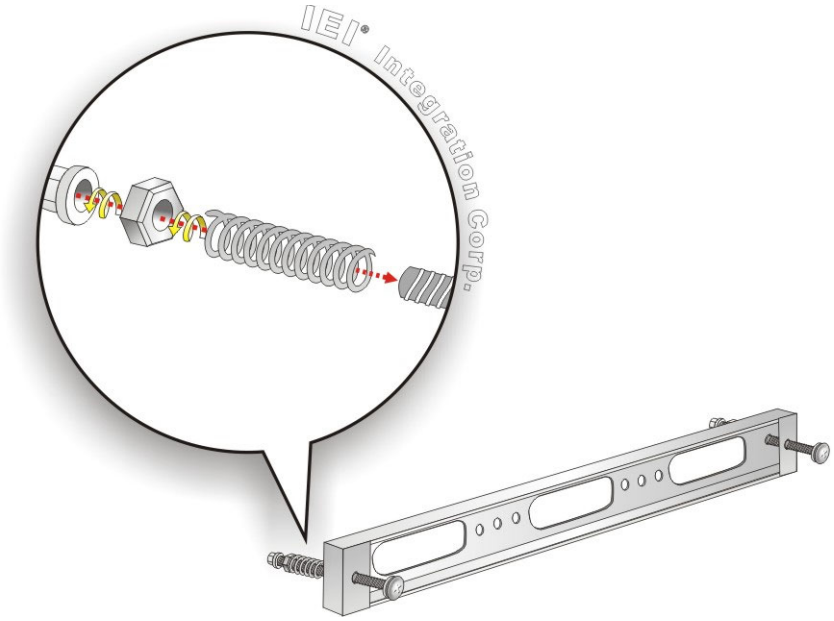

Figure 3-20: Rack Mounting Kit Installation

Step 4: Align the rack mounting bracket screw holes with the VESA mounting holes on the rear of the panel PC.

Step 5: Secure the two rack mounting brackets to the rear of the panel PC by inserting the four retention screws into the VESA mounting holes and tightening them (**Figure 3-21**).

NOTE:

The rack mounting kit described in this section is an optional item. To purchase it, please contact an IEI sales representative.

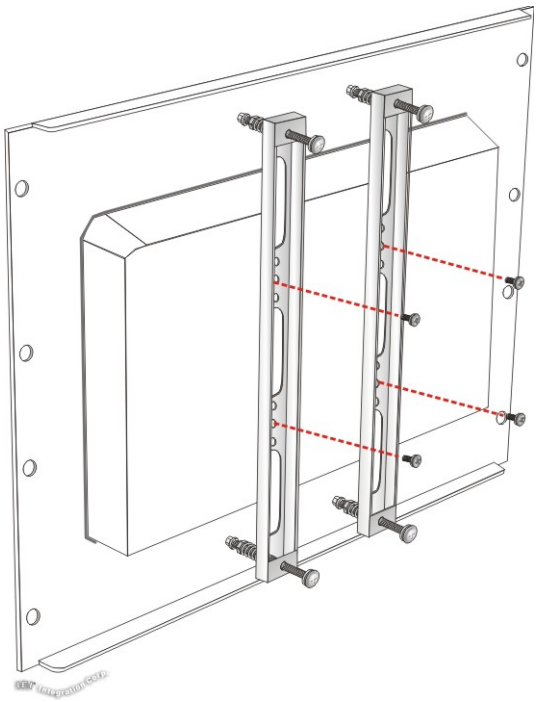

Figure 3-21: Securing Rack Mounting Brackets

Step 6: Slide the flat bezel panel PC with the attached rack/cabinet bracket into a rack or cabinet (**Figure 3-22**).

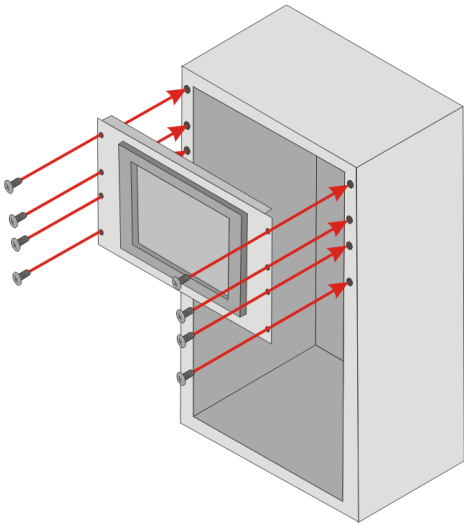

Figure 3-22: Install into a Rack/Cabinet

Step 7: Once the flat bezel panel PC with the attached rack/cabinet bracket has been properly inserted into the rack or cabinet, secure the front of the rack/cabinet bracket to the front of the rack or cabinet (**Figure 3-22**).

3.12.4 Arm Mounting

The AFL3-W15B-H81 is VESA (Video Electronics Standards Association) compliant and can be mounted on an arm with a 75 mm or a 100 mm interface pad. To mount the AFL3-W15B-H81 on an arm, please follow the steps below.

Step 1: The arm is a separately purchased item. Please correctly mount the arm onto the surface it uses as a base. To do this, refer to the installation documentation that came with the mounting arm.

NOTE:

When purchasing the arm please ensure that it is VESA compliant and that the arm has a 75 mm a 100 mm interface pad. If the mounting arm is not VESA compliant it cannot be used to support the AFL3-W15B-H81 flat bezel panel PC.

Step 2: Once the mounting arm has been firmly attached to the surface, lift the flat bezel panel PC onto the interface pad of the mounting arm.

Step 3: Align the retention screw holes on the mounting arm interface with those in the flat bezel panel PC (**Figure 3-23**).

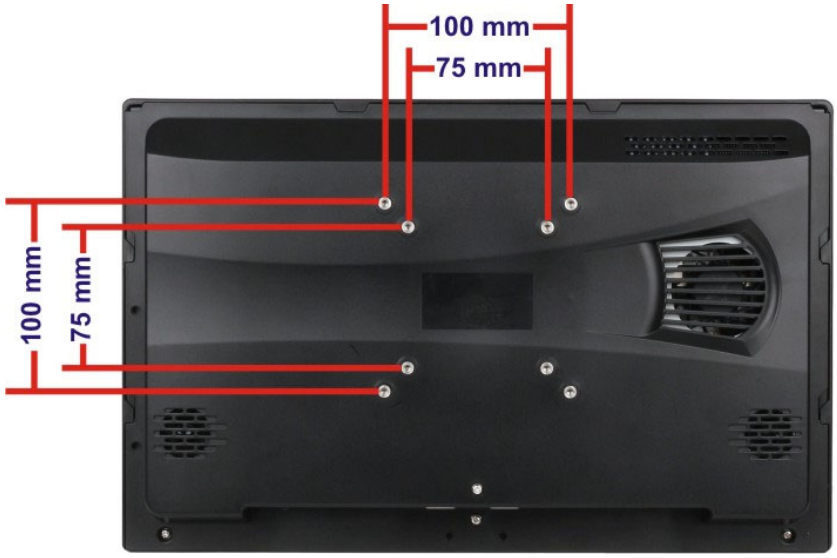

Figure 3-23: Arm Mounting Retention Screw Holes

Step 4: Secure the AFL3-W15B-H81 to the interface pad by inserting four retention screws through the mounting arm interface pad and into the AFL3-W15B-H81.

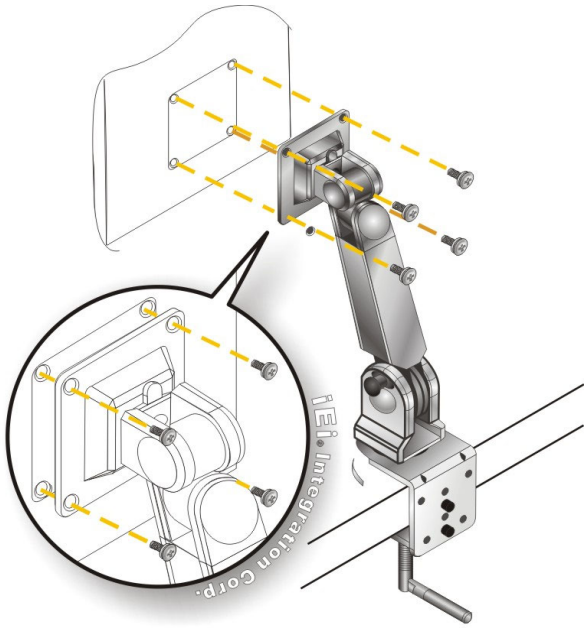

Figure 3-24: Arm Mounting

3.12.5 Stand Mounting

To mount the AFL3-W15B-H81 using the stand mounting kit, please follow the steps below.

Step 1: Locate the screw holes on the rear of the AFL3-W15B-H81. This is where the bracket will be attached.

Step 2: Align the bracket with the screw holes.

Step 3: To secure the bracket to the AFL3-W15B-H81 insert the retention screws into the screw holes and tighten them.

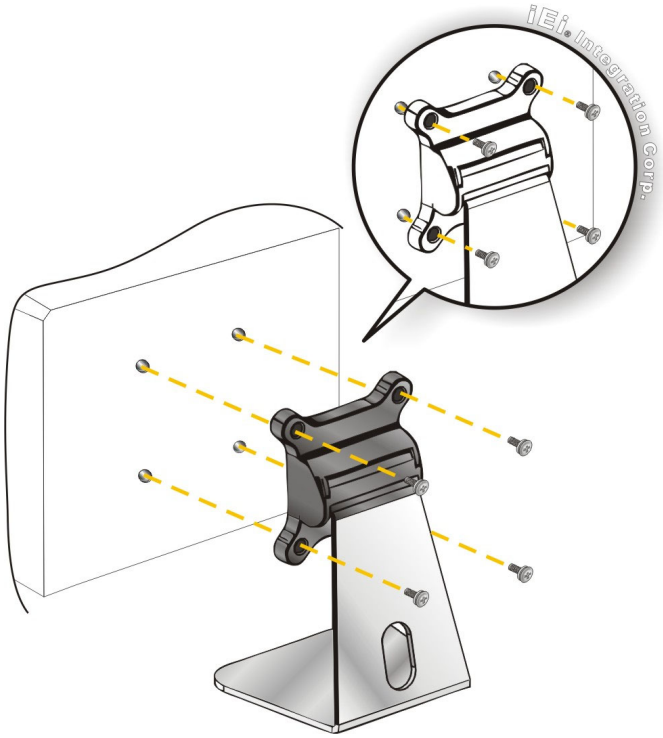

Figure 3-25: Stand Mounting (Stand-A/Bxx)

3.13 Powering On the System

To power on the system, follow the steps below:

Step 1: Connect the power adapter to the power connector of the AFL3-W15B-H81.

Step 2: Connect the power cord to the power adapter. Connect the other end of the power cord to a power source.

Step 3: Locate the power button on the I/O panel.

Step 4: Hold down the power button until the power LED on the front panel turns on in green.

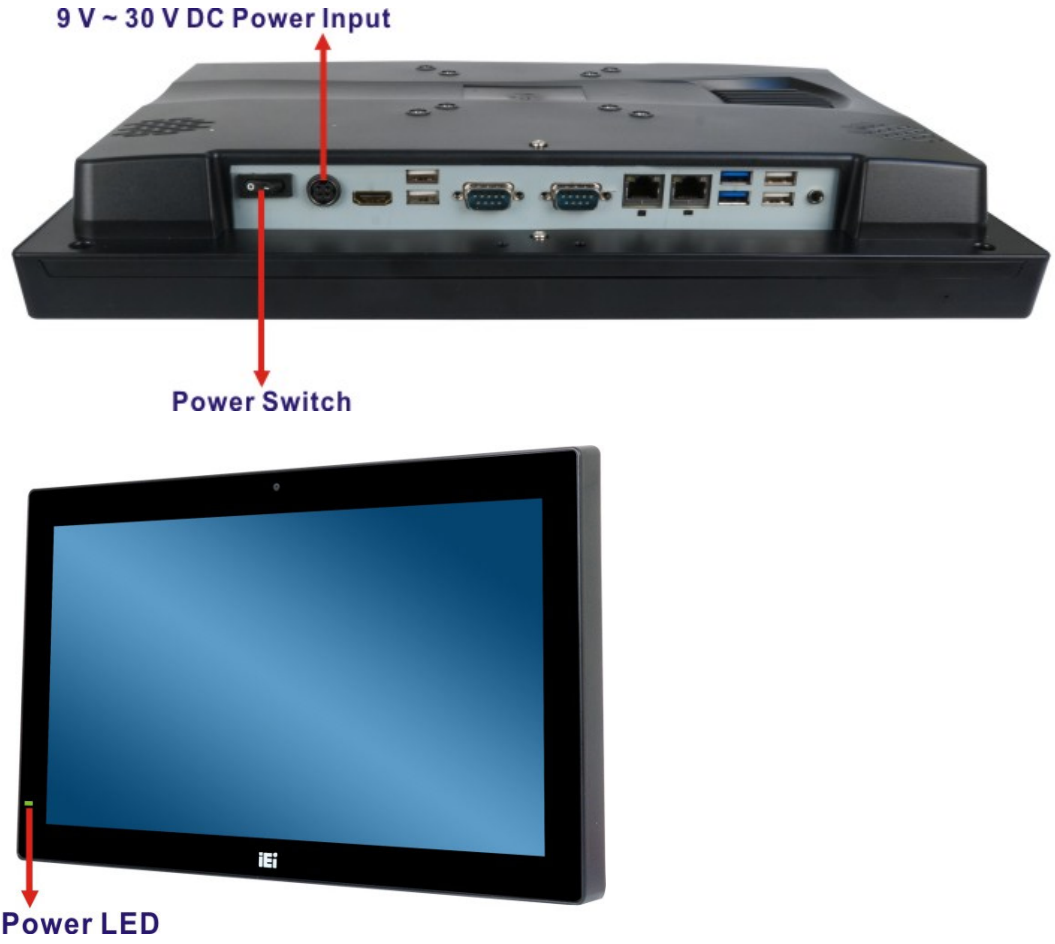

Figure 3-26: Powering On the System

3.14 Reset the System

The reset button enables user to reboot the system when the system is turned on. The reset button location is shown in **Figure 3-27**. Press the reset button to reboot the system.

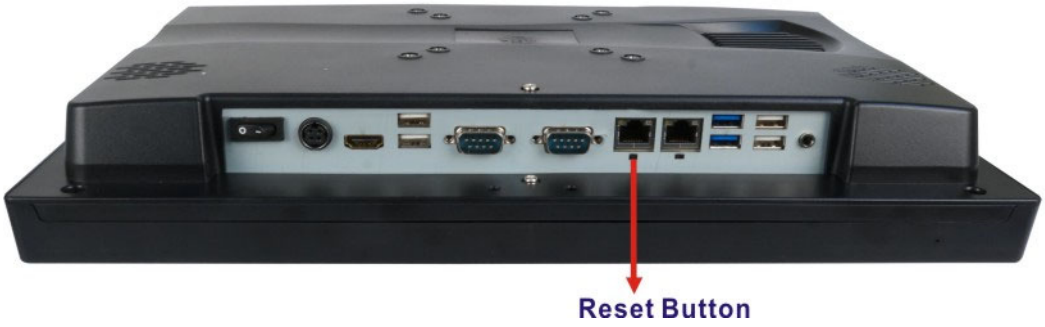

Figure 3-27: Reset Button Location

3.15 Software Installation

NOTE:

The content of the CD may vary throughout the life cycle of the product and is subject to change without prior notice. Visit the IEI website or contact technical support for the latest updates.

The following drivers can be installed on the operating system:

- Chipset
- Graphics
- Audio
- LAN
- Wi-Fi
- USB 3.0 (Windows 7 only)
- Webcam
- Keypad AP
- Touchscreen (resistive type models only)

3.15.1 Keypad AP

Keypad AP is an OSD control tool developed by IEI. After the installation, the Keypad AP can be accessed by clicking the icon on the Windows notification area. It allows users to control screen brightness and audio volume.

Figure 3-28: Keypad AP

3.15.2 Calibrating the Resistive Type Touchscreen

To calibrate the resistive type touchscreen, please follow the steps below.

Step 1: After installation of the touchscreen driver, click the icon on the Windows notification area.

Step 2: Click **Control Panel** from the menu (**Figure 3-29**).

:

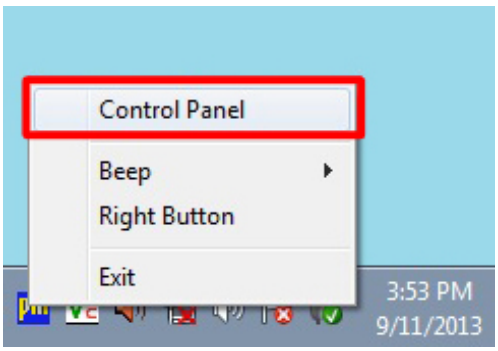

Figure 3-29: Select Control Panel

Step 3: The touchscreen control panel appears (**Figure 3-30**). Click **Configure**.

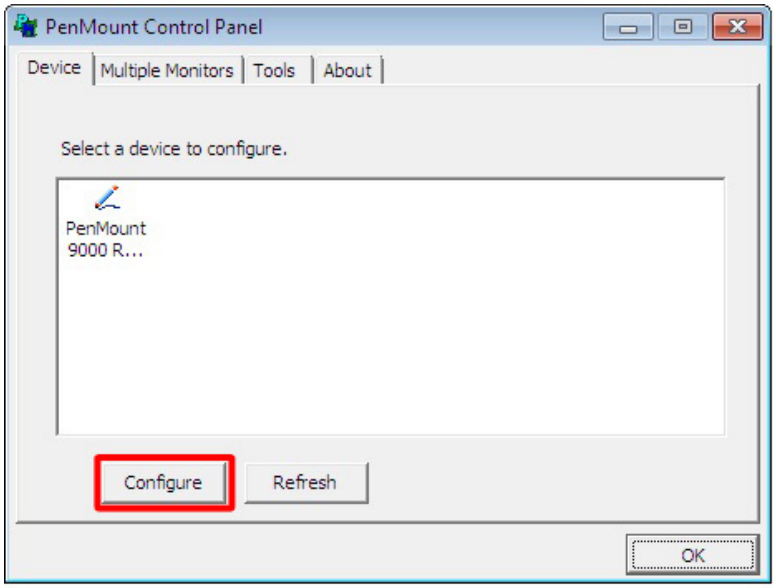

Figure 3-30: Touchscreen Control Panel

Step 4: The user can click **Standard Calibration** or **Advanced Calibration** to proceed with standard or advanced calibration.

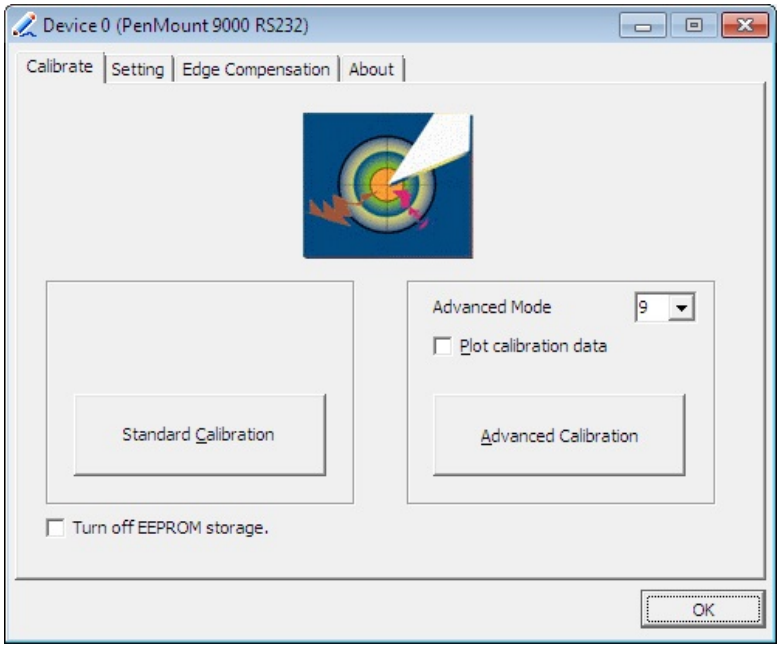

Figure 3-31: Select Calibration Type

Step 5: The calibration window in **Figure 3-32** appears. The user is asked to touch the screen at five specified points, if Standard Calibration is selected. Follow the screen guide to touch and hold each red square in the calibration window until it shows “Lift off to proceed”.

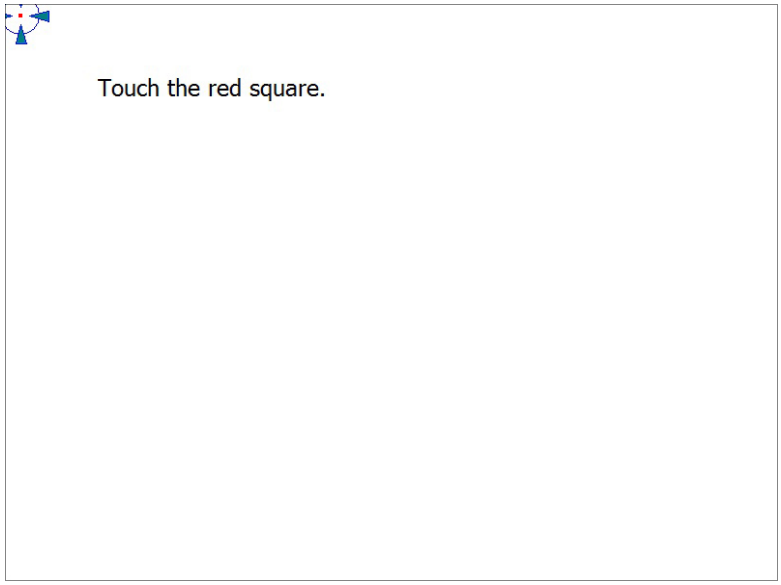

Figure 3-32: Calibration Window

Step 6: When the calibration is complete, the setup returns to the control panel. Click **OK** to exit.

Chapter

4

BIOS Setup

4.1 Introduction

The BIOS is programmed onto the BIOS chip. The BIOS setup program allows changes to certain system settings. This chapter outlines the options that can be changed.

NOTE:

Some of the BIOS options may vary throughout the life cycle of the product and are subject to change without prior notice.

4.1.1 Starting Setup

The UEFI BIOS is activated when the computer is turned on. The setup program can be activated in one of two ways.

1. Press the **DELETE** or **F2** key as soon as the system is turned on or
2. Press the **DELETE** or **F2** key when the "**Press DELETE or F2 to enter SETUP**" message appears on the screen.

If the message disappears before the **DELETE** or **F2** key is pressed, restart the computer and try again.

4.1.2 Using Setup

Use the arrow keys to highlight items, press **ENTER** to select, use the PageUp and PageDown keys to change entries, press **F1** for help and press **ESC** to quit. Navigation keys are shown in the following table.

Key	Function
Up arrow	Move to the item above
Down arrow	Move to the item below
Left arrow	Move to the item on the left hand side
Right arrow	Move to the item on the right hand side
+	Increase the numeric value or make changes
-	Decrease the numeric value or make changes

Key	Function
Page up	Move to the next page
Page down	Move to the previous page
Esc	Main Menu – Quit and do not save changes into CMOS Status Page Setup Menu and Option Page Setup Menu -- Exit current page and return to Main Menu
F1	General help, only for Status Page Setup Menu and Option Page Setup Menu
F2	Load previous values
F3	Load optimized defaults
F4	Save changes and Exit BIOS

Table 4-1: BIOS Navigation Keys

4.1.3 Getting Help

When **F1** is pressed a small help window describing the appropriate keys to use and the possible selections for the highlighted item appears. To exit the Help Window, press **Esc**.

4.1.4 Unable to Reboot after Configuration Changes

If the computer cannot boot after changes to the system configuration is made, CMOS defaults. Use the clear CMOS jumper described in **Chapter 3**.

4.1.5 BIOS Menu Bar

The **menu bar** on top of the BIOS screen has the following main items:

- Main – Changes the basic system configuration.
- Advanced – Changes the advanced system settings.
- Chipset – Changes the chipset settings.
- Boot – Changes the system boot configuration.
- Security – Sets User and Supervisor Passwords.
- Save & Exit – Selects exit options and loads default settings

The following sections completely describe the configuration options found in the menu items at the top of the BIOS screen and listed above.

4.2 Main

The **Main** BIOS menu (**BIOS Menu 1**) appears when the **BIOS Setup** program is entered.

The **Main** menu gives an overview of the basic system information.

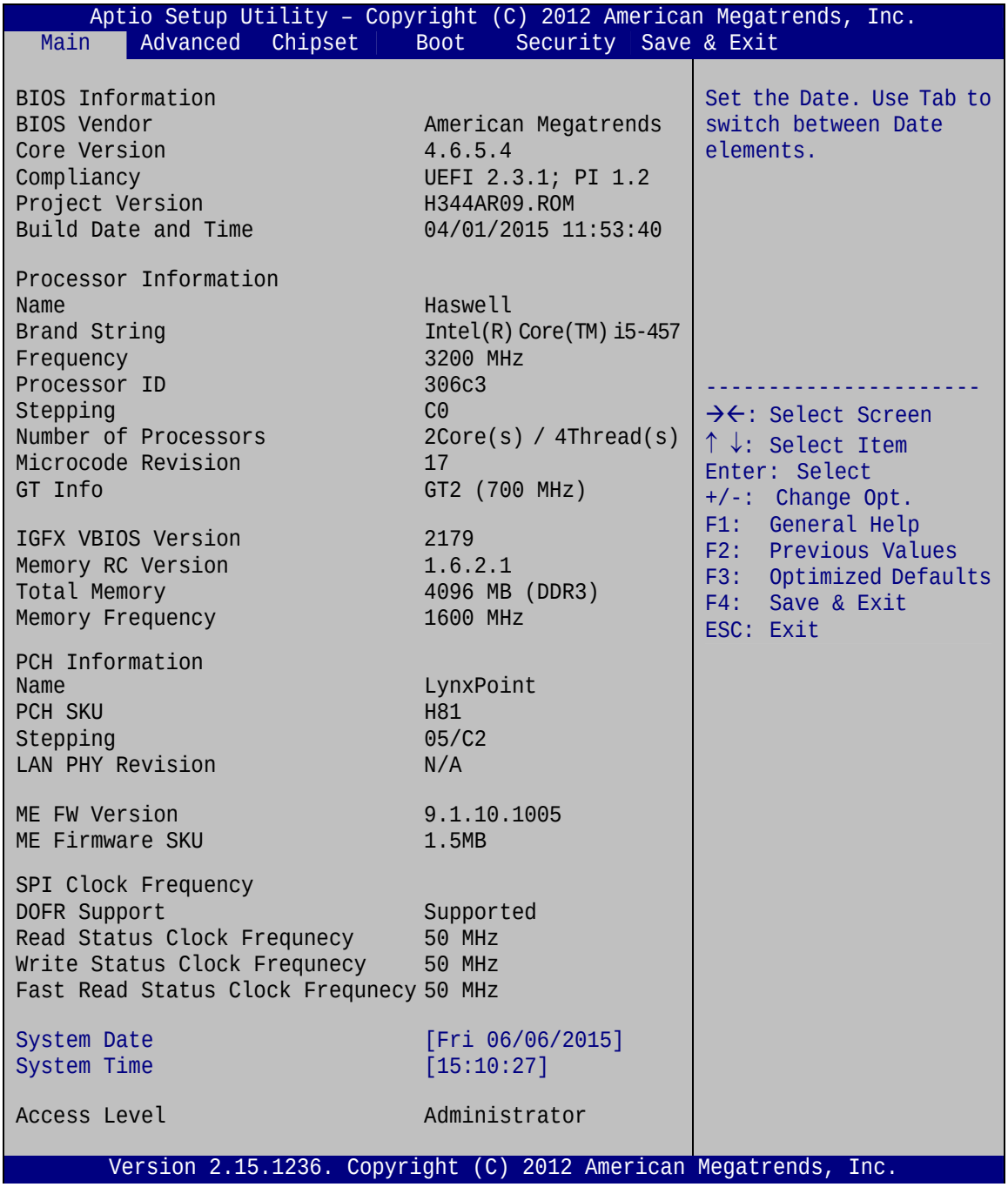

BIOS Menu 1: Main

The **Main** menu has two user configurable fields:

➔ **System Date [xx/xx/xx]**

Use the **System Date** option to set the system date. Manually enter the day, month and year.

➔ **System Time [xx:xx:xx]**

Use the **System Time** option to set the system time. Manually enter the hours, minutes and seconds.

4.3 Advanced

Use the **Advanced** menu (BIOS Menu 2) to configure the CPU and peripheral devices through the following sub-menus:

WARNING!

Setting the wrong values in the sections below may cause the system to malfunction. Make sure that the settings made are compatible with the hardware.

```
        Aptio Setup Utility – Copyright (C) 2012 American Megatrends, Inc.
  Main   Advanced   Chipset    Boot    Security   Save & Exit

> ACPI Settings                          System ACPI Parameters
> RTC Wake Settings
> CPU Configuration
> SATA Configuration                     ----------------------
> Intel(R) Rapid Start Technology        →←: Select Screen
> USB Configuration                      ↑ ↓: Select Item
> F81866 Super IO Configuration          Enter: Select
> F81866 H/M Monitor                     +/-:  Change Opt.
> Serial Port Console Redirection        F1:   General Help
> iEi Feature                            F2:   Previous Values
                                         F3:   Optimized Defaults
                                         F4:   Save & Exit
                                         ESC:  Exit
        Version 2.15.1236. Copyright (C) 2012 American Megatrends, Inc.
```

BIOS Menu 2: Advanced

4.3.1 ACPI Settings

The **ACPI Settings** menu (**BIOS Menu 3**) configures the Advanced Configuration and Power Interface (ACPI) options.

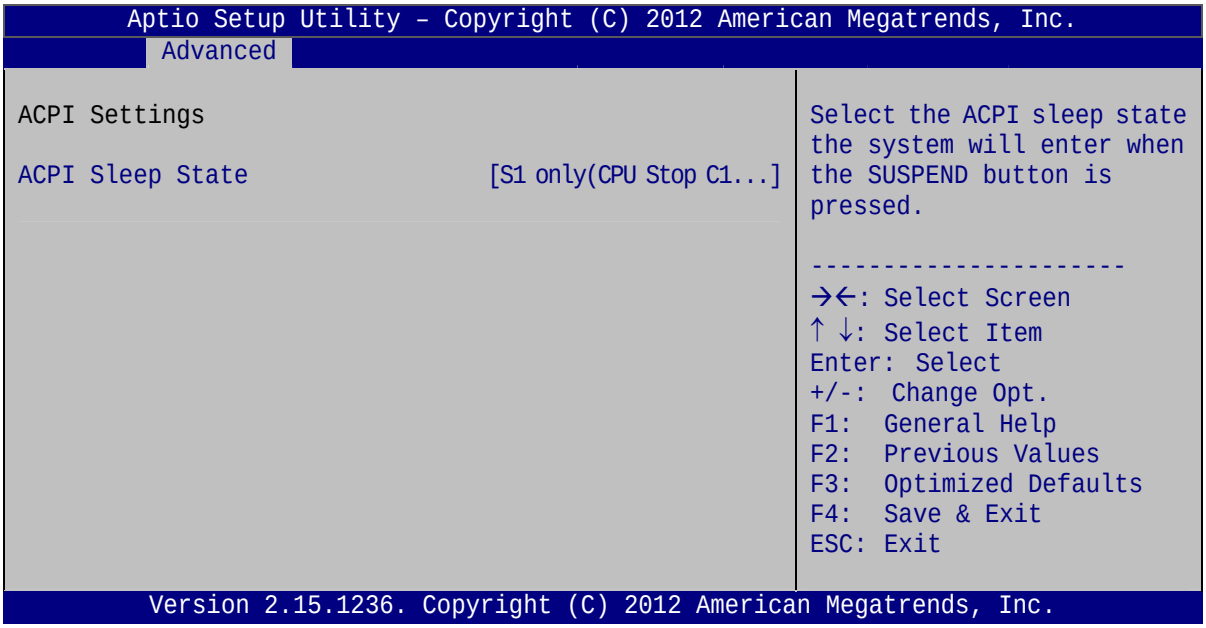

BIOS Menu 3: ACPI Settings

➔ **ACPI Sleep State [S1 only (CPU Stop Clock)]**

Use the **ACPI Sleep State** option to specify the sleep state the system enters when it is not being used.

➔ **S1 only (CPU Stop Clock)**	**DEFAULT**	The system enters S1 (POS) sleep state. The system appears off. The CPU is stopped; RAM is refreshed; the system is running in a low power mode.
➔ **S3 only (Suspend to RAM)**		The caches are flushed and the CPU is powered off. Power to the RAM is maintained. The computer returns slower to a working state, but more power is saved.

4.3.2 RTC Wake Settings

The **RTC Wake Settings** menu (**BIOS Menu 4**) enables the system to wake at the specified time.

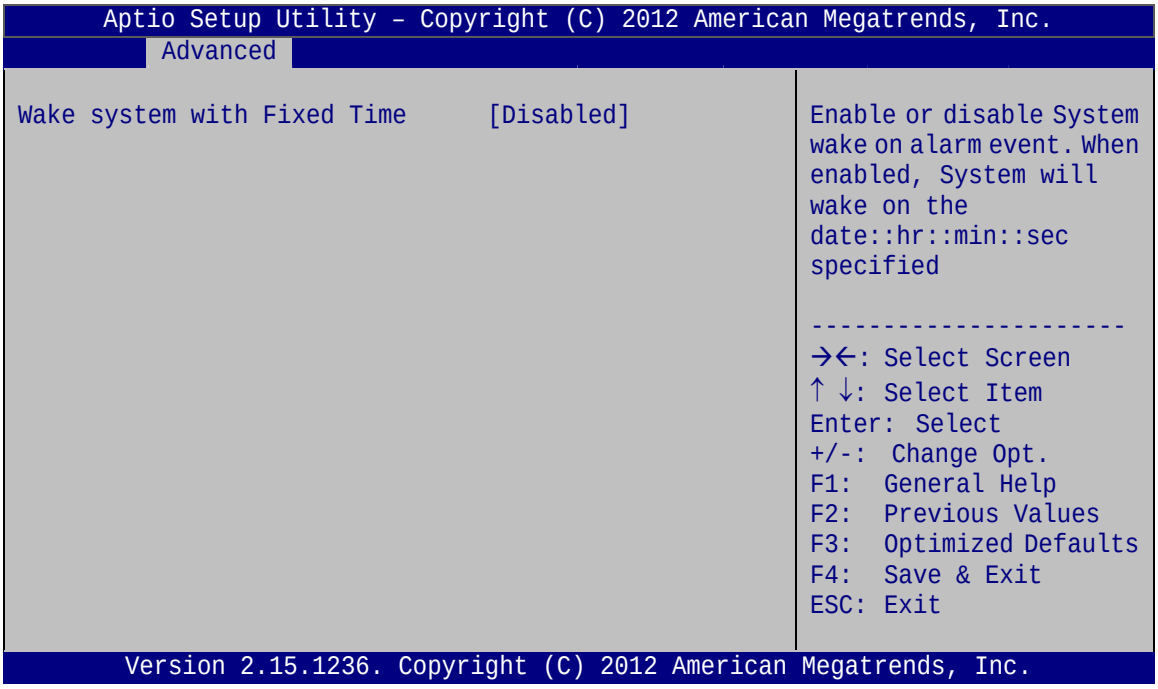

BIOS Menu 4: RTC Wake Settings

➔ **Wake system with Fixed Time [Disabled]**

Use the **Wake system with Fixed Time** option to enable or disable the system wake on alarm event.

➔ **Disabled** **DEFAULT** The real time clock (RTC) cannot generate a wake event

➔ **Enabled** If selected, the **Wake up every day** option appears allowing you to enable to disable the system to wake every day at the specified time. Besides, the following options appear with values that can be selected:

Wake up date

Wake up hour

Wake up minute

Wake up second

After setting the alarm, the computer turns itself on from a suspend state when the alarm goes off.

4.3.3 CPU Configuration

Use the **CPU Configuration** menu (**BIOS Menu 5**) to view detailed CPU specifications and configure the CPU.

```
Aptio Setup Utility – Copyright (C) 2012 American Megatrends, Inc.
Advanced

CPU Configuration                                  Enable for Windows XP and
                                                   Linux (OS optimized for
Intel(R) Core(TM) i5-4570TE CPU @ 2.70GHz          Hyper-Threading
CPU Signature                    306c3             Technology and Disabled
Microcode Patch                  17                for other OS (OS not
Max CPU Speed                    2900 MHz          optimized for
Min CPU Speed                    800 MHz           Hyper-Threading
CPU Speed                        3200 MHz          Technology). When
Processor Cores                  2                 Disabled only one thread
Intel HT Technology              Supported         per enabled core is
Intel VT-x Technology            Supported         enabled.
Intel SMX Technology             Supported
64-bit                           Supported
EIST Technology                  Supported

                                                   ----------------------
L1 Data Cache                    32 KB x 2         →←: Select Screen
L1 Code Cache                    32 KB x 2         ↑ ↓: Select Item
L2 Cache                         256 KB x 2        Enter: Select
L3 Cache                         4096 KB           +/-:  Change Opt.
                                                   F1:  General Help
Hyper-threading                  [Enabled]         F2:  Previous Values
Active Processor Cores           [All]             F3:  Optimized Defaults
Intel Virtualization Technology  [Disabled]        F4:  Save & Exit
EIST                             [Enabled]         ESC: Exit
Intel TXT(LT) Support            [Disabled]

Version 2.15.1236. Copyright (C) 2012 American Megatrends, Inc.
```

BIOS Menu 5: CPU Configuration

➔ **Hyper-threading [Enabled]**

Use the **Hyper-threading** BIOS option to enable or disable the Intel Hyper-Threading Technology.

➔	**Disabled**		Disables the Intel Hyper-Threading Technology.
➔	**Enabled**	**DEFAULT**	Enables the Intel Hyper-Threading Technology.

➔ **Active Processor Cores [All]**

Use the **Active Processor Cores** BIOS option to enable numbers of cores in the processor package.

➔	**All**	**DEFAULT**	Enable all cores in the processor package.
➔	**1**		Enable one core in the processor package.

➔ **Intel Virtualization Technology [Disabled]**

Use the **Intel Virtualization Technology** option to enable or disable virtualization on the system. When combined with third party software, Intel® Virtualization technology allows several OSs to run on the same system at the same time.

➔	**Disabled**	**DEFAULT**	Disables Intel Virtualization Technology.
➔	**Enabled**		Enables Intel Virtualization Technology.

➔ **EIST [Enabled]**

Use the **EIST** option to enable or disable the Enhanced Intel® SpeedStep Technology (EIST).

➔	**Disabled**		Disables Enhanced Intel® SpeedStep Technology
➔	**Enabled**	**DEFAULT**	Enables Enhanced Intel® SpeedStep Technology

4.3.4 SATA Configuration

Use the **SATA Configuration** menu (**BIOS Menu 6**) to change and/or set the configuration of the SATA devices installed in the system.

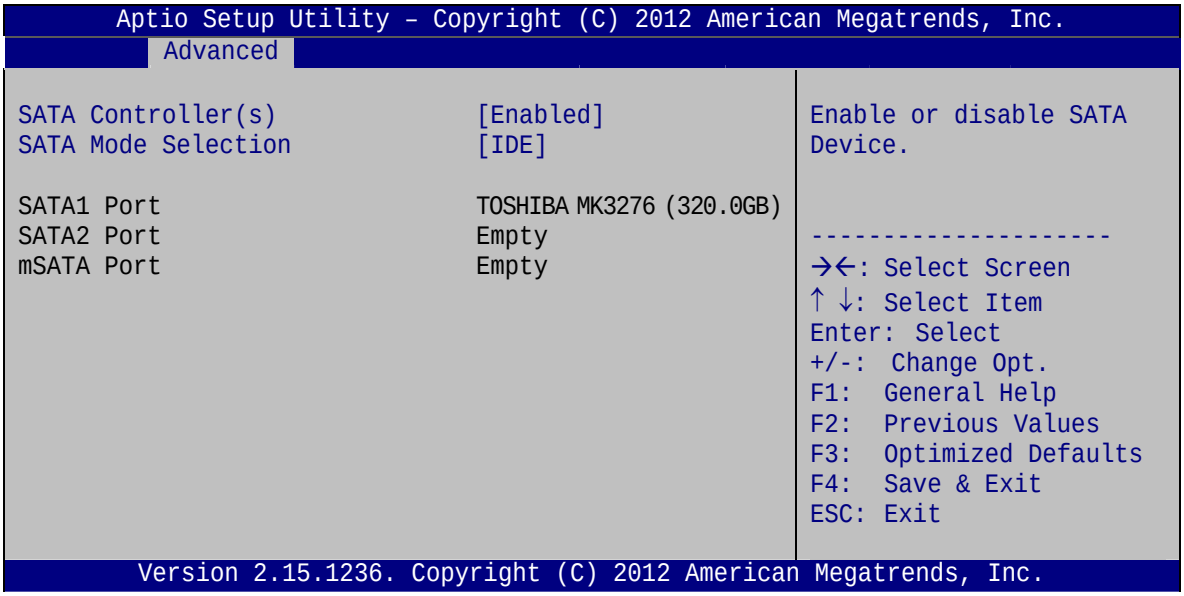

BIOS Menu 6: SATA Configuration

➔ **SATA Controller(s) [Enabled]**

Use the **SATA Controller(s)** option to configure the SATA controller(s).

- ➔ **Enabled** **DEFAULT** Enables the on-board SATA controller(s).
- ➔ **Disabled** Disables the on-board SATA controller(s).

➔ **SATA Mode Selection [IDE]**

Use the **SATA Mode Selection** option to determine how SATA devices operate.

- ➔ **IDE** **DEFAULT** Configures SATA devices as normal IDE device.
- ➔ **AHCI** Configures SATA devices as AHCI device.

4.3.5 Intel(R) Rapid Start Technology

Use the **Intel(R) Rapid Start Technology** (**BIOS Menu 7**) menu to configure Intel® Rapid Start Technology support.

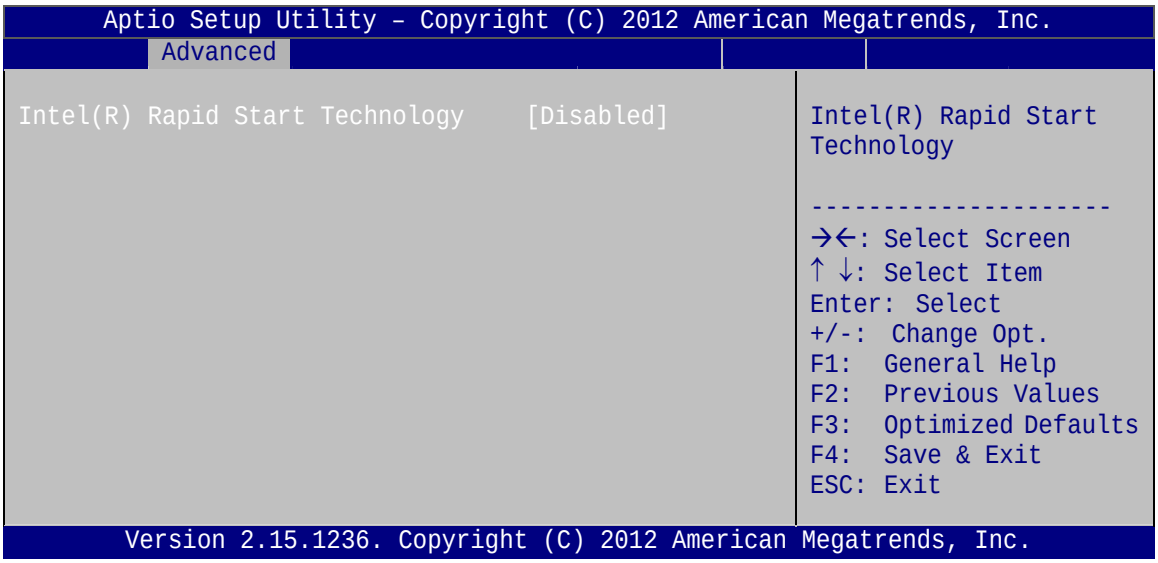

BIOS Menu 7: Intel(R) Rapid Start Technology

➔ **Intel(R) Rapid Start Technology [Disabled]**

Use **Intel(R) Rapid Start Technology** option to enable or disable the Intel® Rapid Start Technology function.

➔	**Disabled**	**DEFAULT**	Intel® Rapid Start Technology is disabled
➔	**Enabled**		Intel® Rapid Start Technology is enabled

4.3.6 USB Configuration

Use the **USB Configuration** menu (**BIOS Menu 8**) to read USB configuration information and configure the USB settings.

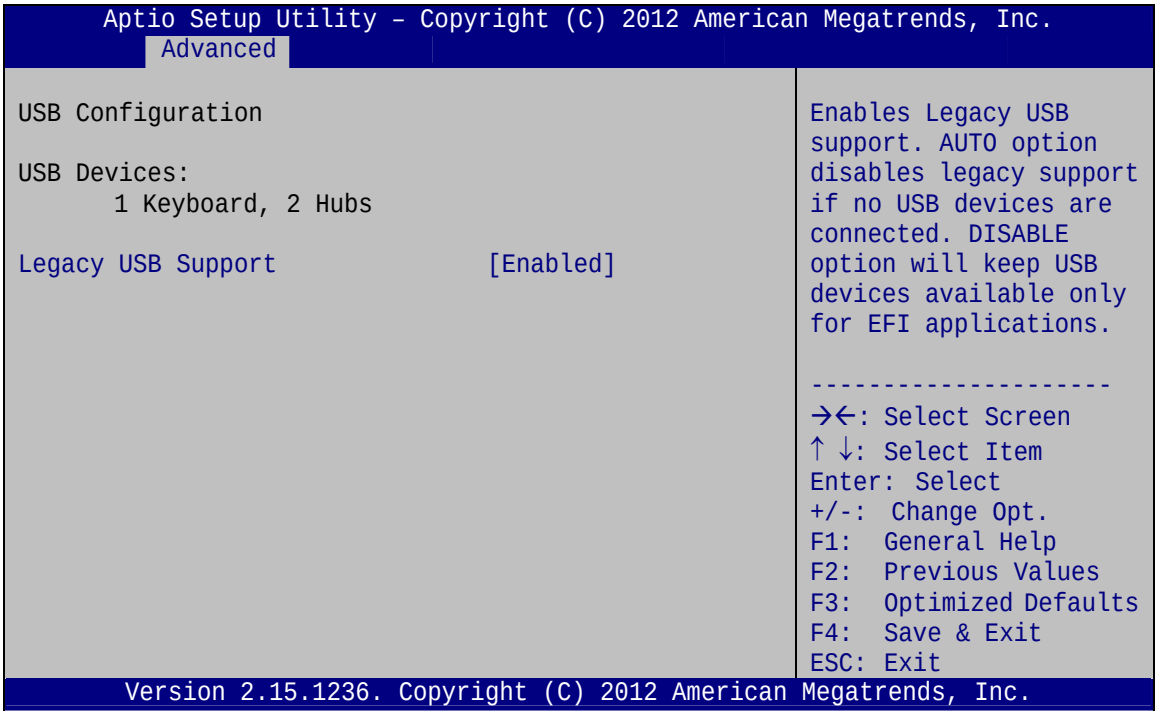

BIOS Menu 8: USB Configuration

➔ **USB Devices**

The **USB Devices** field lists the USB devices that are enabled on the system

➔ **Legacy USB Support [Enabled]**

Use the **Legacy USB Support** BIOS option to enable USB mouse and USB keyboard support. Normally if this option is not enabled, any attached USB mouse or USB keyboard does not become available until a USB compatible operating system is fully booted with all USB drivers loaded. When this option is enabled, any attached USB mouse or USB keyboard can control the system even when there is no USB driver loaded onto the system.

➔	**Enabled**	**DEFAULT**	Legacy USB support enabled
➔	**Disabled**		Legacy USB support disabled
➔	**Auto**		Legacy USB support disabled if no USB devices are connected

4.3.7 F81866 Super IO Configuration

Use the **F81866 Super IO Configuration** menu (**BIOS Menu 9**) to set or change the configurations for the serial ports.

```
        Aptio Setup Utility – Copyright (C) 2012 American Megatrends, Inc.
           Advanced
 F81866 Super IO Configuration                  | Set Parameters of Serial
                                                | Port 1 (COMA)
 F81866 Super IO Chip            F81866         |
 > Serial Port 1 Configuration                  |
 > Serial Port 2 Configuration                  | ---------------------
 > Touch Configuration                          | →←: Select Screen
                                                | ↑ ↓: Select Item
                                                | Enter: Select
                                                | +/-: Change Opt.
                                                | F1: General Help
                                                | F2: Previous Values
                                                | F3: Optimized Defaults
                                                | F4: Save & Exit
                                                | ESC: Exit
        Version 2.15.1236. Copyright (C) 2012 American Megatrends, Inc.
```

BIOS Menu 9: F81866 Super IO Configuration

4.3.7.1 Serial Port n Configuration

Use the **Serial Port n Configuration** menu (**BIOS Menu 10**) to configure the serial port n.

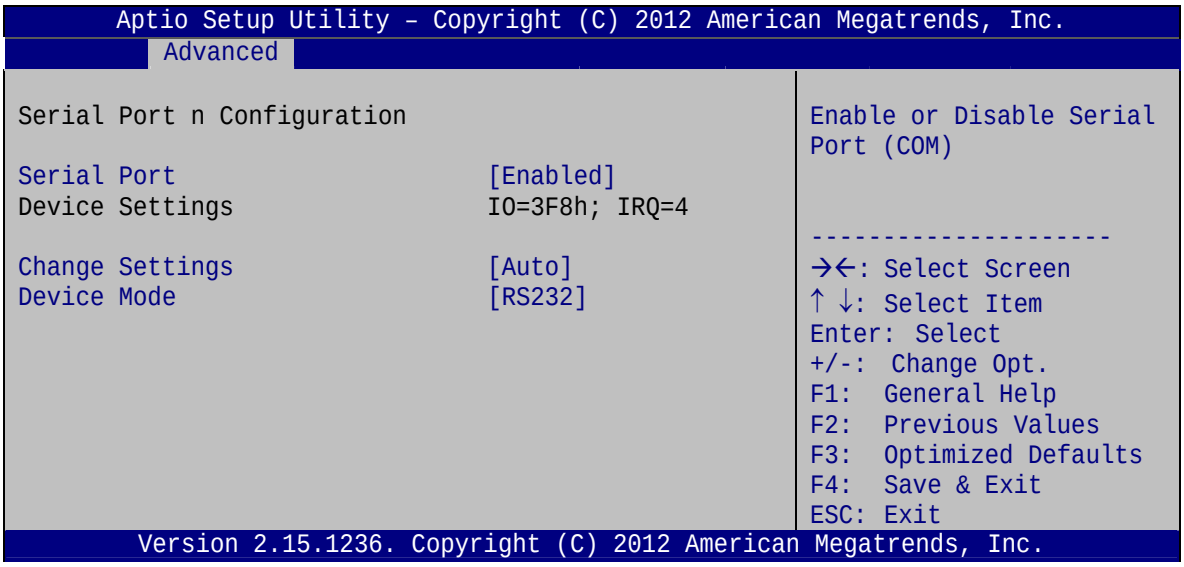

BIOS Menu 10: Serial Port n Configuration Menu

4.3.7.1.1 Serial Port 1 Configuration

➔ **Serial Port [Enabled]**

Use the **Serial Port** option to enable or disable the serial port.

➔ **Disabled**		Disable the serial port
➔ **Enabled**	**DEFAULT**	Enable the serial port

➔ **Change Settings [Auto]**

Use the **Change Settings** option to change the serial port IO port address and interrupt address.

➔ **Auto**	**DEFAULT**	The serial port IO port address and interrupt address are automatically detected.
➔ **IO=3F8h; IRQ=4**		Serial Port I/O port address is 3F8h and the interrupt address is IRQ4

- ➔ **IO=3F8h; IRQ=3, 4** Serial Port I/O port address is 3F8h and the interrupt address is IRQ3, 4
- ➔ **IO=2C0h; IRQ=3, 4** Serial Port I/O port address is 2C0h and the interrupt address is IRQ3, 4
- ➔ **IO=2C8h; IRQ=3, 4** Serial Port I/O port address is 2C8h and the interrupt address is IRQ3, 4

➔ **Device Mode [RS232]**

The **Device Mode** option is used to set the Serial Port 1 signaling mode.

- ➔ **RS232** **DEFAULT** Enables serial port RS-232 support.
- ➔ **RS422/ RS485** Enables serial port RS-422/485 support.

NOTE:

The COM1_SEL1 jumper should have the same settings as set in this BIOS option. Refer to **Section 3.8** for the detailed jumper settings.

4.3.7.1.2 Serial Port 2 Configuration

➔ **Serial Port [Enabled]**

Use the **Serial Port** option to enable or disable the serial port.

- ➔ **Disabled** Disable the serial port
- ➔ **Enabled** **DEFAULT** Enable the serial port

➔ **Change Settings [Auto]**

Use the **Change Settings** option to change the serial port IO port address and interrupt address.

➔ **Auto**	**DEFAULT**	The serial port IO port address and interrupt address are automatically detected.
➔ **IO=2F8h; IRQ=3**		Serial Port I/O port address is 2F8h and the interrupt address is IRQ3
➔ **IO=3F8h; IRQ=3, 4**		Serial Port I/O port address is 3F8h and the interrupt address is IRQ3, 4
➔ **IO=2F8h; IRQ=3, 4**		Serial Port I/O port address is 2F8h and the interrupt address is IRQ3, 4
➔ **IO=2C0h; IRQ=3, 4**		Serial Port I/O port address is 2C0h and the interrupt address is IRQ3, 4
➔ **IO=2C8h; IRQ=3, 4**		Serial Port I/O port address is 2C8h and the interrupt address is IRQ3, 4

4.3.7.1.3 Touch Configuration

➔ **Serial Port [Enabled]**

Use the **Serial Port** option to enable or disable the serial port.

➔ **Disabled**		Disable the serial port
➔ **Enabled**	**DEFAULT**	Enable the serial port

➔ **Change Settings [Auto]**

Use the **Change Settings** option to change the serial port IO port address and interrupt address.

➔ **Auto**	**DEFAULT**	The serial port IO port address and interrupt address are automatically detected.
➔ **IO=2D0h; IRQ=10**		Serial Port I/O port address is 2D0h and the interrupt address is IRQ10
➔ **IO=2D0h; IRQ=10, 11**		Serial Port I/O port address is 2D0h and the interrupt address is IRQ10, 11

➔ **IO=2E8h; IRQ=10, 11** — Serial Port I/O port address is 2E8h and the interrupt address is IRQ10, 11

➔ **IO=2D8h; IRQ=10, 11** — Serial Port I/O port address is 2D8h and the interrupt address is IRQ10, 11

4.3.8 F81866 H/W Monitor

The F81866 H/W Monitor menu (**BIOS Menu 11**) displays operating temperature and fan speeds.

```
Aptio Setup Utility – Copyright (C) 2012 American Megatrends, Inc.
Advanced

PC Health Status                                  Smart Fan Mode Select

> Smart Fan Mode Configuration
CPU temperature                  : +45°C
SYS temperature                  : +48°C
CPU_FAN1 Speed                   : 2846 RPM       ---------------------
SYS_FAN1 Speed                   : N/A            →←: Select Screen
CPU_CORE                         : +1.736 V       ↑ ↓: Select Item
+5V                              : +5.045 V       Enter: Select
+12V                             : +12.144 V      +/-:  Change Opt.
DDR                              : +1.520 V       F1:   General Help
+5VSB                            : +4.944 V       F2:   Previous Values
+3.3V                            : +3.312 V       F3:   Optimized Defaults
+3.3VSB                          : +3.296 V       F4:   Save & Exit
VBAT                             : +3.152 V       ESC:  Exit

Version 2.15.1236. Copyright (C) 2012 American Megatrends, Inc.
```

BIOS Menu 11: F81866 H/W Monitor

➔ **PC Health Status**

The following system parameters and values are shown. The system parameters that are monitored are:

- System Temperatures:
  - CPU Temperature
  - System Temperature
- Fan Speeds:
  - CPU_FAN1 Speed

- SYS_FAN1 Speed

- Voltages:
  - CPU_CORE
  - +5V
  - +12V
  - DDR
  - +5VSB
  - +3.3V
  - +3.3VSB
  - VBAT

4.3.8.1 Smart Fan Mode Configuration

Use the **Smart Fan Mode Configuration submenu** (**BIOS Menu 12**) to configure fan speed settings.

```
Aptio Setup Utility – Copyright (C) 2012 American Megatrends, Inc.
        Advanced
Smart Fan Mode Configuration                    Smart Fan Mode Select

CPU_FAN1 Smart Fan Control       [Auto Duty-Cycle Mode]
CPU Temperature 1                60
CPU Temperature 2                50
CPU Temperature 3                40
CPU Temperature 4                30
SYS_FAN1 Smart Fan Control       [Auto Duty-Cycle Mode]
System Temperature 1             60
System Temperature 2             50
System Temperature 3             40
System Temperature 4             30
                                 ---------------------
                                 →←: Select Screen
                                 ↑ ↓: Select Item
                                 Enter: Select
                                 +/-: Change Opt.
                                 F1: General Help
                                 F2: Previous Values
                                 F3: Optimized Defaults
                                 F4: Save & Exit
                                 ESC: Exit
Version 2.15.1236. Copyright (C) 2012 American Megatrends, Inc.
```

BIOS Menu 12: Smart Fan Mode Configuration

➔ **CPU_FAN1 Smart Fan Control/SYS_FAN1 Smart Fan Control [Auto Duty-Cycle Mode]**

Use the **CPU_FAN1 Smart Fan Control/SYS_FAN1 Smart Fan Control** option to configure the CPU/System Smart Fan.

➔	**Auto Duty-Cycle Mode**	**DEFAULT**	The fan adjusts its speed using Auto Duty-Cycle Mode settings.
➔	**Manual Duty Mode**		The fan spins at the speed set in Manual Duty Mode settings.

➔ **CPU Temperature 1/2/3/4**

Use the + or – key to change the **CPU Temperature 1/2/3/4** value. Enter a decimal number between 1 and 100.

➔ **System Temperature 1/2/3/4**

Use the + or – key to change the **System Temperature 1/2/3/4** value. Enter a decimal number between 1 and 100.

4.3.9 Serial Port Console Redirection

The **Serial Port Console Redirection** menu (**BIOS Menu 13**) allows the console redirection options to be configured. Console redirection allows users to maintain a system remotely by re-directing keyboard input and text output through the serial port.

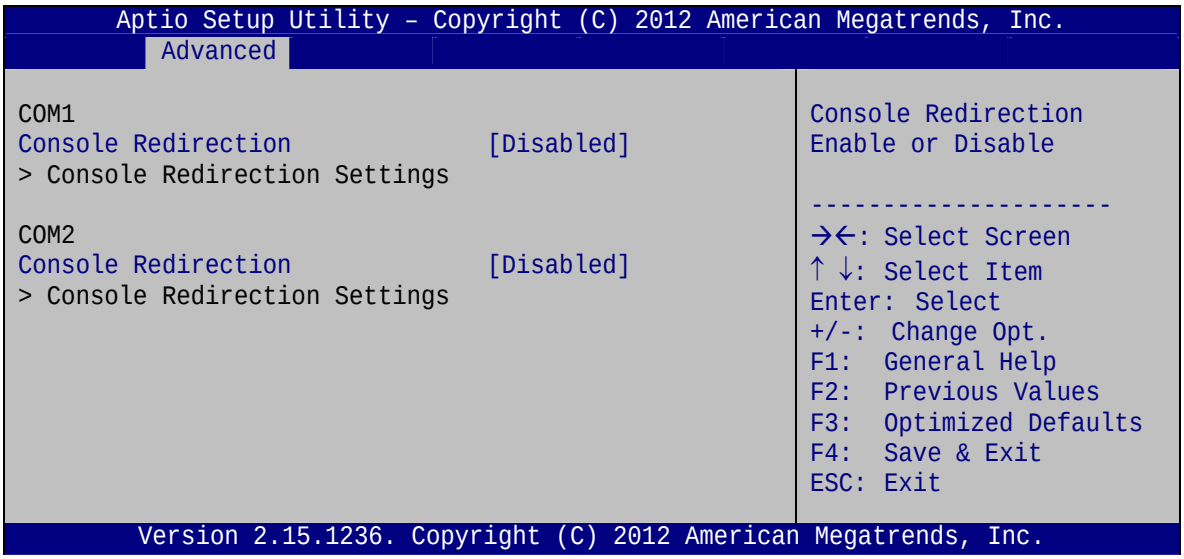

BIOS Menu 13: Serial Port Console Redirection

➔ **Console Redirection [Disabled]**

Use **Console Redirection** option to enable or disable the console redirection function.

➔ **Disabled**	**DEFAULT**	Disabled the console redirection function
➔ **Enabled**		Enabled the console redirection function

4.3.9.1 Console Redirection Settings

Use the **Console Redirection Settings** menu (**BIOS Menu 14**) to configure console redirection settings of the specified serial port. This menu appears only when the **Console Redirection** option is enabled.

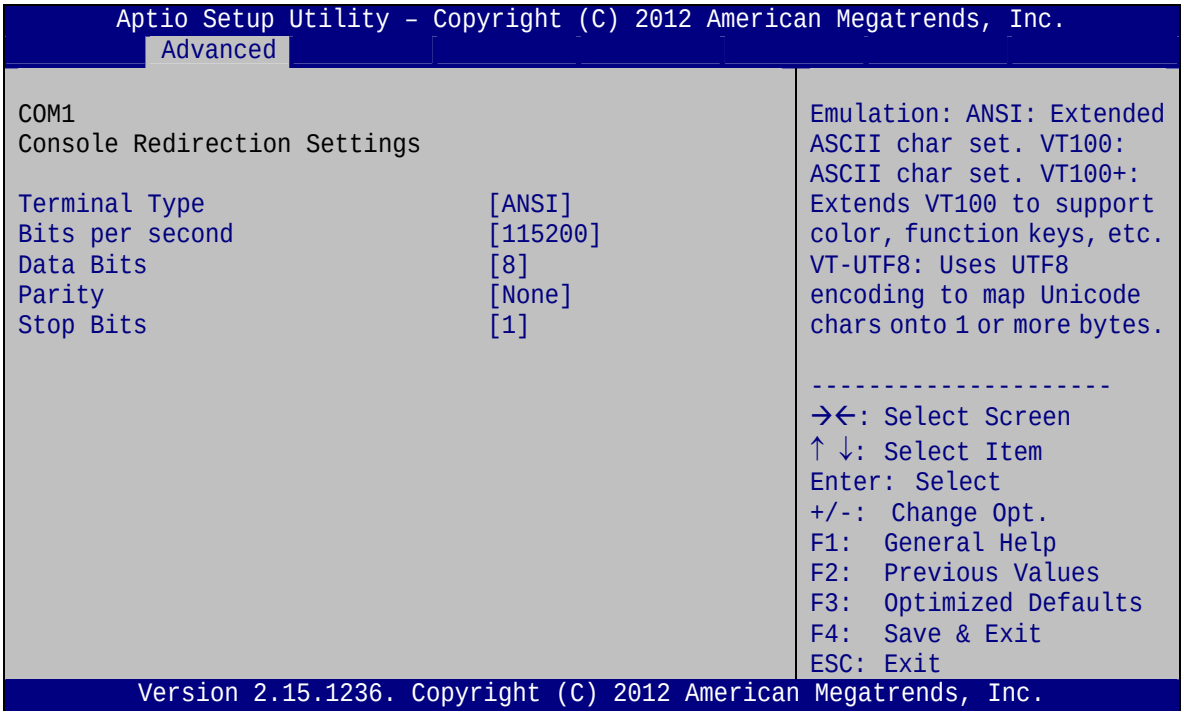

BIOS Menu 14: Console Redirection Settings

➔ **Terminal Type [ANSI]**

Use the **Terminal Type** option to specify the remote terminal type.

➔ **VT100**	The target terminal type is VT100
➔ **VT100+**	The target terminal type is VT100+

- **VT-UTF8** The target terminal type is VT-UTF8
- **ANSI** **DEFAULT** The target terminal type is ANSI

➔ **Bits per second [115200]**

Use the **Bits per second** option to specify the serial port transmission speed. The speed must match the other side. Long or noisy lines may require lower speeds.

- **9600** Sets the serial port transmission speed at 9600.
- **19200** Sets the serial port transmission speed at 19200.
- **57600** Sets the serial port transmission speed at 57600.
- **115200** **DEFAULT** Sets the serial port transmission speed at 115200.

➔ **Data Bits [8]**

Use the **Data Bits** option to specify the number of data bits.

- **7** Sets the data bits at 7.
- **8** **DEFAULT** Sets the data bits at 8.

➔ **Parity [None]**

Use the **Parity** option to specify the parity bit that can be sent with the data bits for detecting the transmission errors.

- **None** **DEFAULT** No parity bit is sent with the data bits.
- **Even** The parity bit is 0 if the number of ones in the data bits is even.
- **Odd** The parity bit is 0 if the number of ones in the data bits is odd.
- **Mark** The parity bit is always 1. This option does not provide error detection.
- **Space** The parity bit is always 0. This option does not provide error detection.

➔ **Stop Bits [1]**

Use the **Stop Bits** option to specify the number of stop bits used to indicate the end of a serial data packet. Communication with slow devices may require more than 1 stop bit.

➔	**1**	**DEFAULT**	Sets the number of stop bits at 1.
➔	**2**		Sets the number of stop bits at 2.

4.3.10 iEi Feature

Use the **iEi Feature** menu (**BIOS Menu 15**) to configure One Key Recovery function.

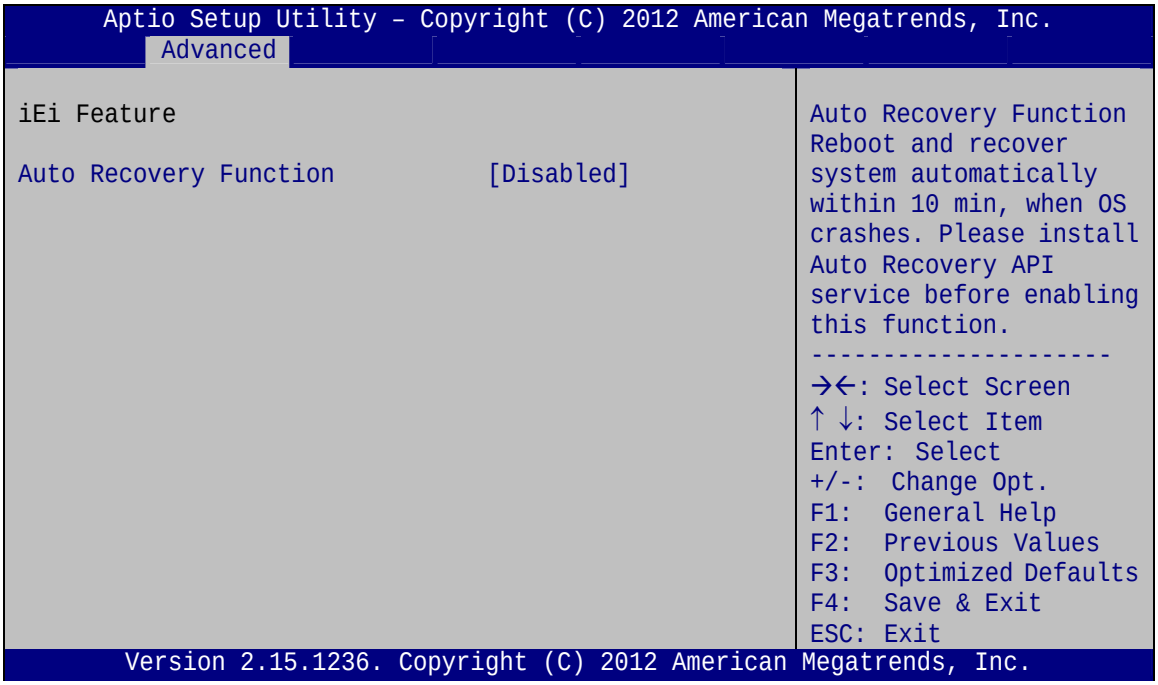

BIOS Menu 15: iEi Feature

➔ **Auto Recovery Function [Disabled]**

Use the **Auto Recovery Function** BIOS option to enable or disable the auto recovery function of the IEI One Key Recovery.

➔	**Disabled**	**DEFAULT**	Auto recovery function disabled
➔	**Enabled**		Auto recovery function enabled

4.4 Chipset

Use the **Chipset** menu (**BIOS Menu 16**) to access the PCH and System Agent (SA) configuration menus.

WARNING!

Setting the wrong values for the Chipset BIOS selections in the Chipset BIOS menu may cause the system to malfunction.

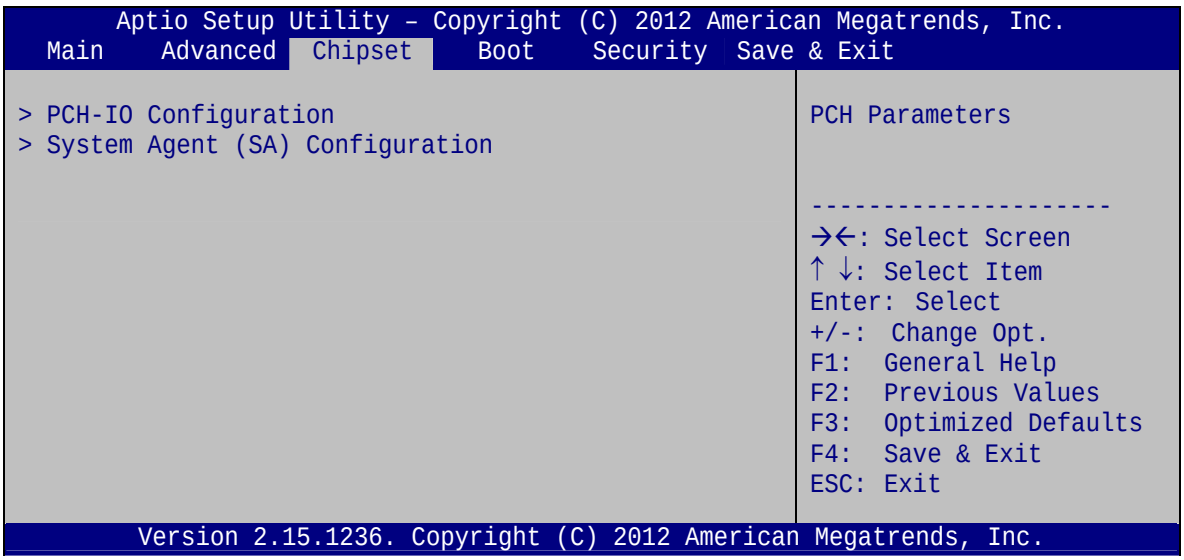

BIOS Menu 16: Chipset

4.4.1 PCH-IO Configuration

Use the **PCH-IO Configuration** menu (**BIOS Menu 17**) to configure the PCH IO settings.

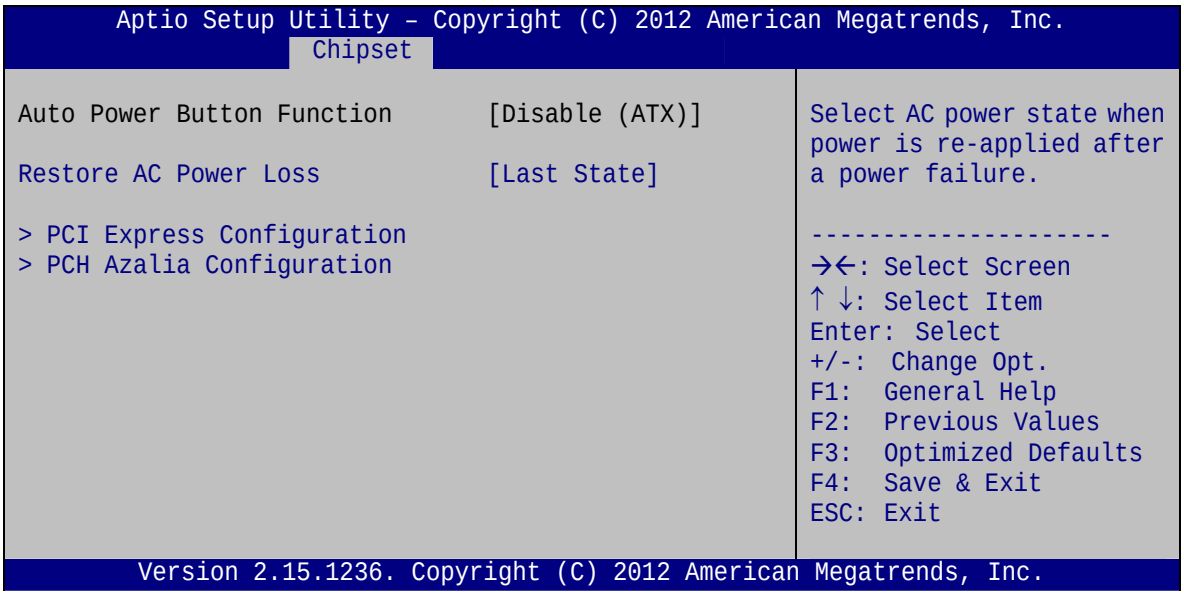

BIOS Menu 17: PCH-IO Configuration

➔ **Restore AC Power Loss [Last State]**

Use the **Restore AC Power Loss** BIOS option to specify what state the system returns to if there is a sudden loss of power to the system.

➔ **Power Off**		The system remains turned off
➔ **Power On**		The system turns on
➔ **Last State**	**DEFAULT**	The system returns to its previous state. If it was on, it turns itself on. If it was off, it remains off.

4.4.1.1 PCI Express Configuration

Use the **PCI Express Configuration** menu (**BIOS Menu 18**) to configure the PCI Express slots.

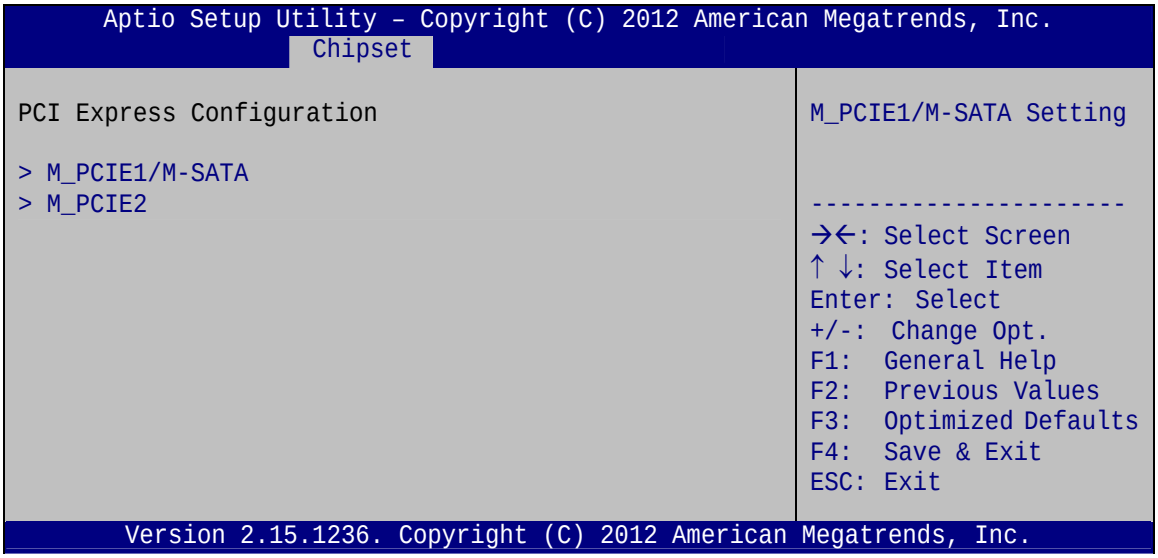

BIOS Menu 18: PCI Express Configuration

4.4.1.1.1 M_PCIE1/M-SATA and M_PCIE2

Use the **M_PCIE1/M-SATA** and **M_PCIE2** menus (**BIOS Menu 19**) to configure the **M_PCIE1** and **M_PCIE2** slot settings.

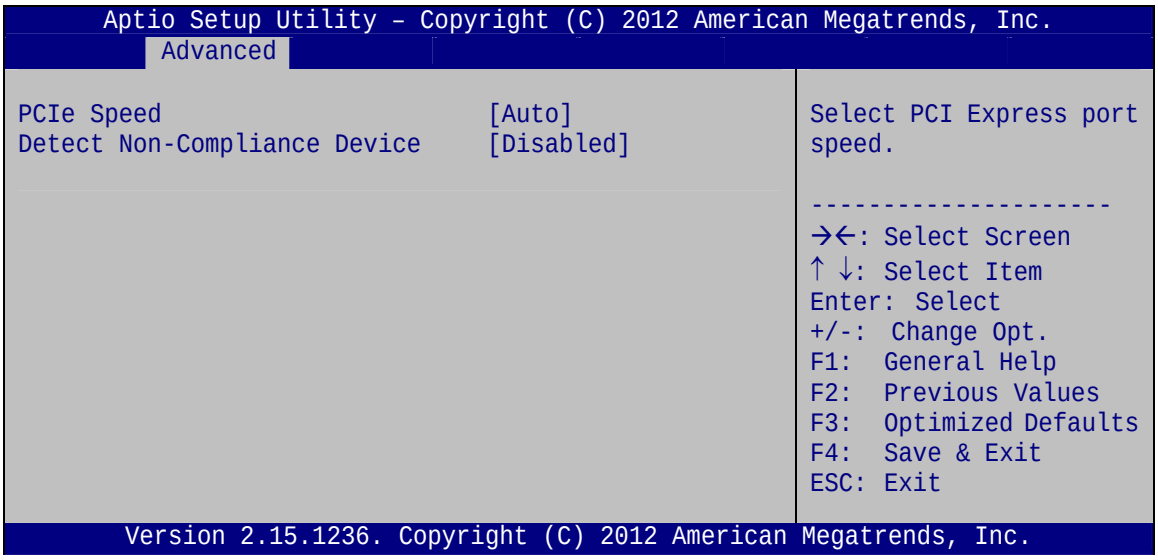

BIOS Menu 19: M_PCIE1/M-SATA and M_PCIE2 Configuration Menu

➔ **PCIe Speed [Auto]**

Use this option to select the support type of the PCIe Mini slots. The following options are available:

- Auto **Default**
- Gen1
- Gen2

➔ **Detect Non-Compliance Device [Disbled]**

Use the **Detect Non-Compliance Device** option to enable or disable detecting if a non-compliance PCI Express device is connected to the PCI Express slot.

➔ **Disabled**	**DEFAULT**	Disables to detect if a non-compliance PCI Express device is connected to the PCI Express slot.
➔ **Enabled**		Enables to detect if a non-compliance PCI Express device is connected to the PCI Express slot.

4.4.1.2 PCH Azalia Configuration

Use the **PCH Azalia Configuration** menu (**BIOS Menu 20**) to configure the PCH Azalia controller.

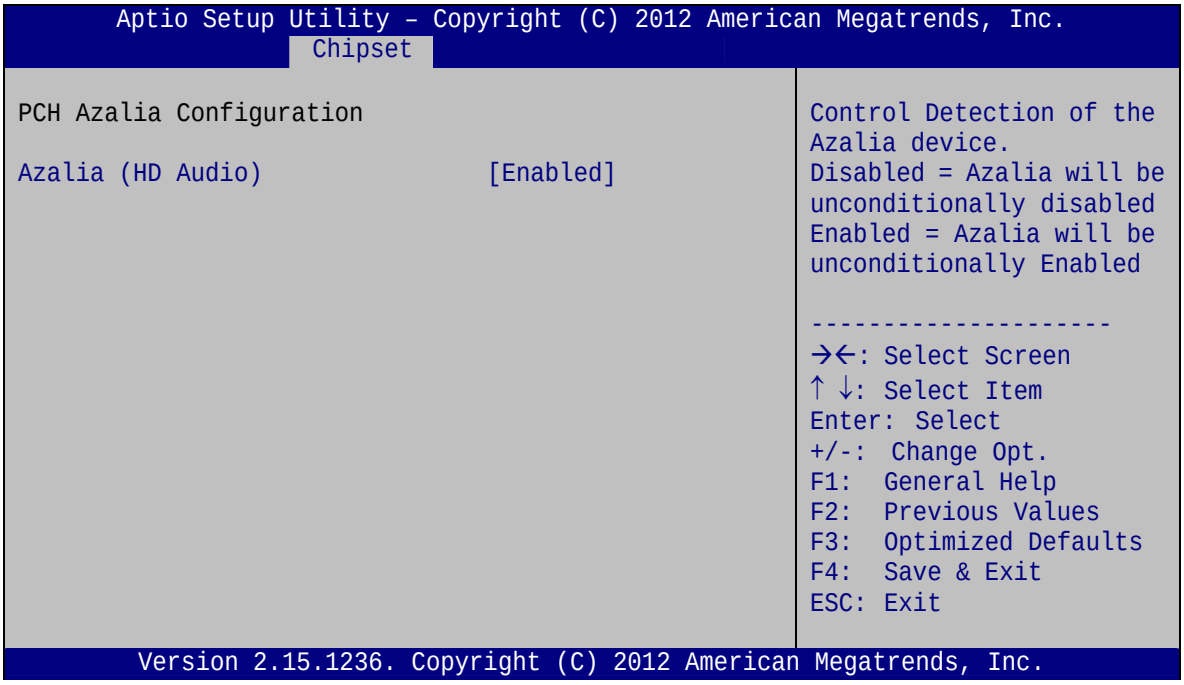

BIOS Menu 20: PCH Azalia Configuration

➔ **Azalia (HD Audio) [Enabled]**

The **Azalia** option enables or disables the HD Audio controller.

➔ **Enabled** **DEFAULT** The onboard HD Audio controller is enabled.

➔ **Disabled** The onboard HD Audio controller is disabled.

4.4.2 System Agent (SA) Configuration

Use the **System Agent (SA) Configuration** menu (**BIOS Menu 21**) to configure the System Agent (SA) parameters.

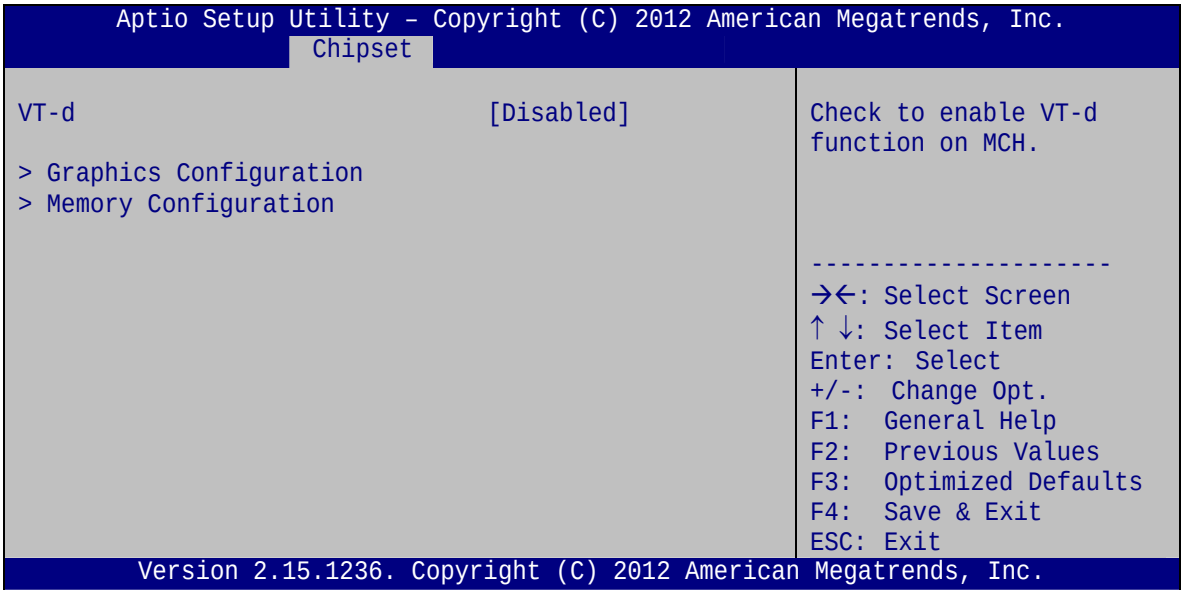

BIOS Menu 21: System Agent (SA) Configuration

➔ **VT-d [Disabled]**

Use the **VT-d** option to enable or disable VT-d support.

➔	**Disabled**	**DEFAULT**	Disables VT-d support.
➔	**Enabled**		Enables VT-d support.

4.4.2.1 Graphics Configuration

Use the **Graphics Configuration** menu (**BIOS Menu 22**) to configure the graphics settings

```
Aptio Setup Utility – Copyright (C) 2012 American Megatrends, Inc.
                    Chipset

Graphics Configuration                                  Select which of
                                                        IGFX/PEG/PCI Graphics
Primary Display                  [Auto]                 device should be Primary
DVMT Pre-Allocated               [256M]                 Display Or select SG for
DVMT Total Gfx Mem               [MAX]                  Switchable Gfx.
> LCD Control
                                                        ---------------------
                                                        →←: Select Screen
                                                        ↑ ↓: Select Item
                                                        Enter: Select
                                                        +/-:  Change Opt.
                                                        F1:   General Help
                                                        F2:   Previous Values
                                                        F3:   Optimized Defaults
                                                        F4:   Save & Exit
                                                        ESC:  Exit

Version 2.15.1236. Copyright (C) 2012 American Megatrends, Inc.
```

BIOS Menu 22: Graphics Configuration

➔ **Primary Display [Auto]**

Use the **Primary Display** option to select the graphics controller used as the primary boot device.

- Auto **DEFAULT**
- IGFX
- PEG
- PCIE/PCI

➔ **DVMT Pre-Allocated [256M]**

Use the **DVMT Pre-Allocated** option to specify a fixed amount of memory that can be allocated for the internal graphics device. Configuration options are listed below.

- 32M
- 64M

- 128M
- 256M **DEFAULT**
- 512M

➔ **DVMT Total Gfx Mem [MAX]**

Use the **DVMT Total Gfx Mem** option to specify the maximum amount of memory that can be allocated for the internal graphics device. Configuration options are listed below.

- 128M
- 256M
- MAX **DEFAULT**

4.4.2.1.1 LCD Control

Use the **LCD Control** menu (**BIOS Menu 23**) to display the LCD Control settings.

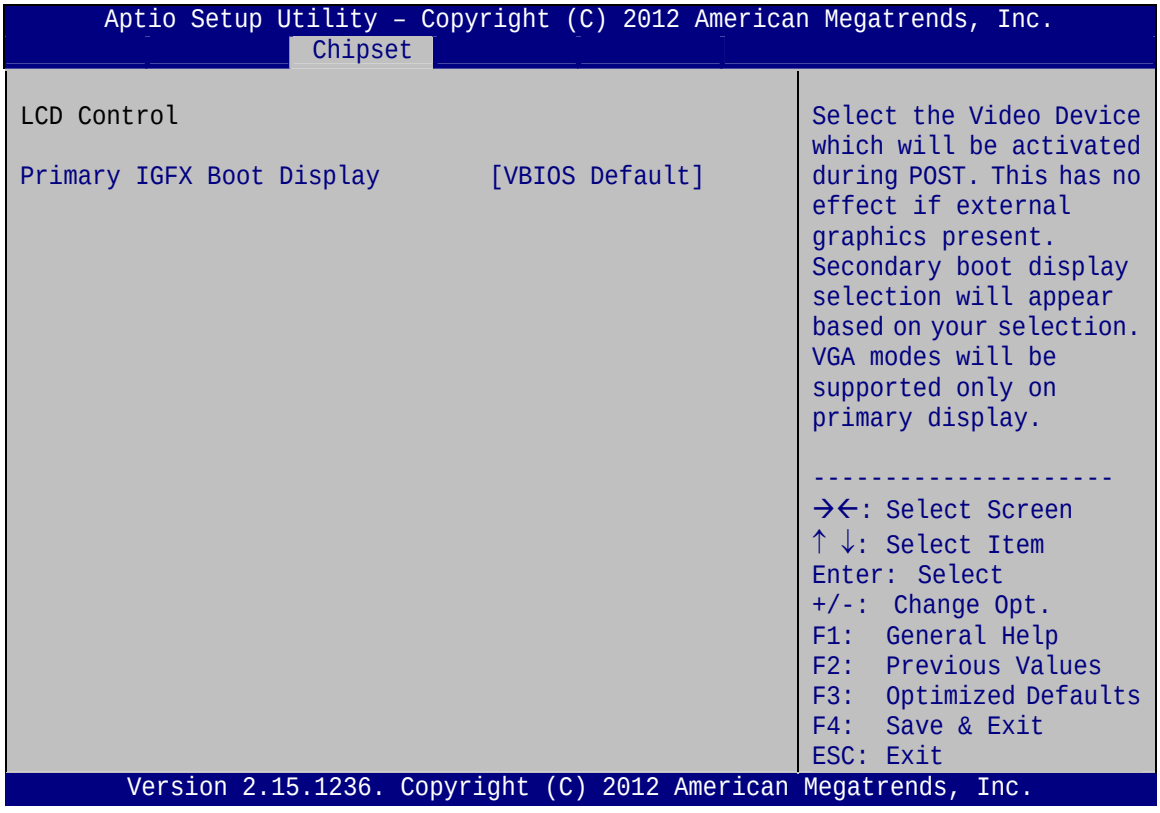

BIOS Menu 23: LCD Control

➔ **Primary IGFX Boot Display [VBIOS Default]**

Use the **Primary IGFX Boot Display** option to select the display device used by the system when it boots. Configuration options are listed below.

- VBIOS Default **DEFAULT**
- CRT
- LVDS
- HDMI

4.4.2.2 Memory Configuration

Use the **Memory Configuration** menu (**BIOS Menu 24**) to display the memory information.

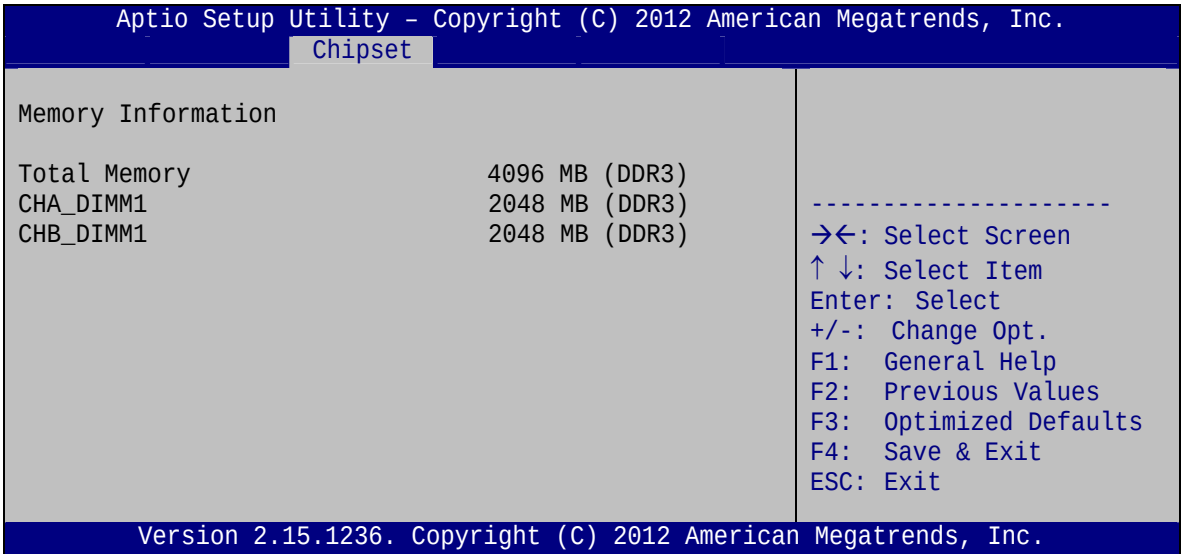

BIOS Menu 24: Memory Configuration

4.5 Boot

Use the **Boot** menu (**BIOS Menu 25**) to configure system boot options.

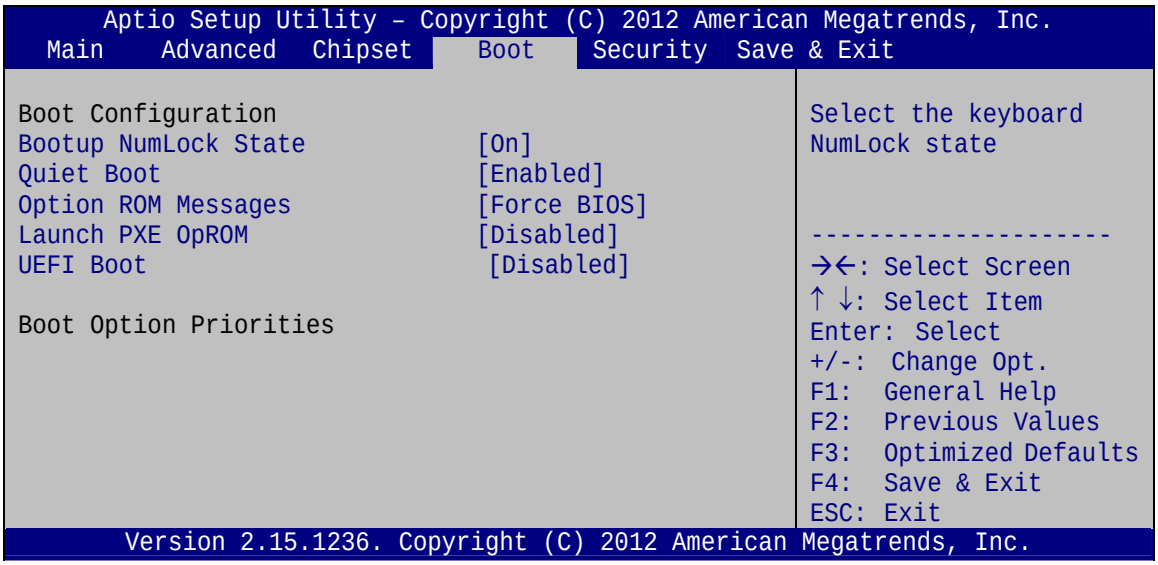

BIOS Menu 25: Boot

➔ **Bootup NumLock State [On]**

Use the **Bootup NumLock State** BIOS option to specify if the number lock setting must be modified during boot up.

➔ **On** **DEFAULT** Allows the Number Lock on the keyboard to be enabled automatically when the computer system boots up. This allows the immediate use of the 10-key numeric keypad located on the right side of the keyboard. To confirm this, the Number Lock LED light on the keyboard is lit.

➔ **Off** Does not enable the keyboard Number Lock automatically. To use the 10-keys on the keyboard, press the Number Lock key located on the upper left-hand corner of the 10-key pad. The Number Lock LED on the keyboard lights up when the Number Lock is engaged.

➔ **Quiet Boot [Enabled]**

Use the **Quiet Boot** BIOS option to select the screen display when the system boots.

➔ **Disabled**		Normal POST messages displayed
➔ **Enabled**	**DEFAULT**	OEM Logo displayed instead of POST messages

➔ **Option ROM Messages [Force BIOS]**

Use the **Option ROM Messages** option to set the Option ROM display mode.

➔ **Force BIOS**	**DEFAULT**	Sets display mode to force BIOS.
➔ **Keep Current**		Sets display mode to current.

➔ **Launch PXE OpROM [Disabled]**

Use the **Launch PXE OpROM** option to enable or disable boot option for legacy network devices.

➔ **Disabled**	**DEFAULT**	Ignore all PXE Option ROMs
➔ **Enabled**		Load PXE Option ROMs

➔ **UEFI Boot [Disabled]**

Use the **UEFI Boot** option to enable or disable to boot from the UEFI devices.

➔ **Enabled**		Boot from UEFI devices is enabled.
➔ **Disabled**	**DEFAULT**	Boot from UEFI devices is disabled.

4.6 Security

Use the **Security** menu (**BIOS Menu 26**) to set system and user passwords.

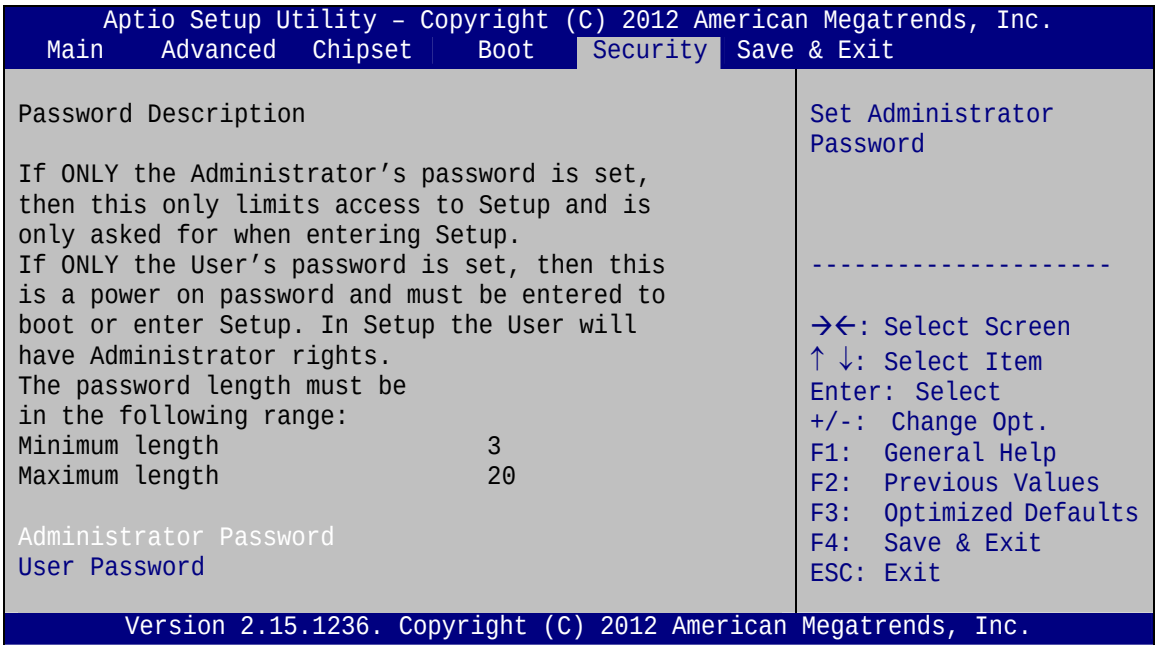

BIOS Menu 26: Security

➔ **Administrator Password**

Use the **Administrator Password** to set or change an administrator password.

➔ **User Password**

Use the **User Password** to set or change a user password.

4.7 Save & Exit

Use the **Save & Exit** menu (**BIOS Menu 27**) to load default BIOS values, optimal failsafe values and to save configuration changes.

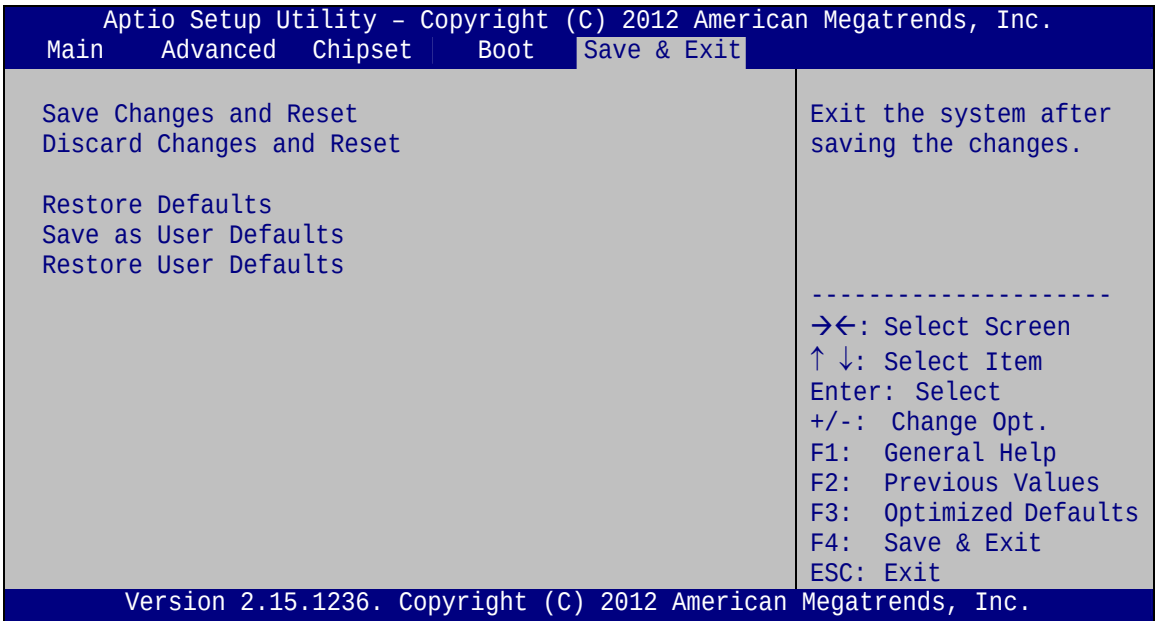

BIOS Menu 27: Save & Exit

➔ **Save Changes and Reset**

Use the **Save Changes and Reset** option to save the changes made to the BIOS options and reset the system.

➔ **Discard Changes and Reset**

Use the **Discard Changes and Reset** option to exit the system without saving the changes made to the BIOS configuration setup program.

➔ **Restore Defaults**

Use the **Restore Defaults** option to load the optimal default values for each of the parameters on the Setup menus. **F3 key can be used for this operation.**

➔ **Save as User Defaults**

Use the **Save as User Defaults** option to save the changes done so far as user defaults.

➔ **Restore User Defaults**

Use the **Restore User Defaults** option to restore the user defaults to all the setup options.

Chapter

5

System Maintenance

5.1 System Maintenance Introduction

If the components of the AFL3-W15B-H81 fail they must be replaced. Please contact the system reseller or vendor to purchase the replacement parts. Back cover removal instructions for the AFL3-W15B-H81 are described in **Section 3.4**.

5.2 Anti-static Precautions

WARNING:

Failure to take ESD precautions during the maintenance of the AFL3-W15B-H81 may result in permanent damage to the AFL3-W15B-H81 and severe injury to the user.

Electrostatic discharge (ESD) can cause serious damage to electronic components, including the AFL3-W15B-H81. Dry climates are especially susceptible to ESD. It is therefore critical that whenever the AFL3-W15B-H81 is accessed internally, or any other electrical component is handled, the following anti-static precautions are strictly adhered to.

- ***Wear an anti-static wristband***: - Wearing a simple anti-static wristband can help to prevent ESD from damaging the board.
- ***Self-grounding***: - Before handling the board touch any grounded conducting material. During the time the board is handled, frequently touch any conducting materials that are connected to the ground.
- ***Use an anti-static pad***: - When configuring the AFL3-W15B-H81, place it on an anti-static pad. This reduces the possibility of ESD damaging the AFL3-W15B-H81.
- ***Only handle the edges of the PCB***: - When handling the PCB, hold the PCB by the edges.

5.3 Turn off the Power

WARNING:

Failing to turn off the system before opening it can cause permanent damage to the system and serious or fatal injury to the user.

Before any maintenance procedures are carried out on the system, make sure the system is turned off.

5.4 SO-DIMM Replacement

To install/replace the SO-DIMM modules, please follow the steps below.

Step 1: Remove the back cover (**Section 3.4**).

Step 2: Locate the SO-DIMM modules on the motherboard.

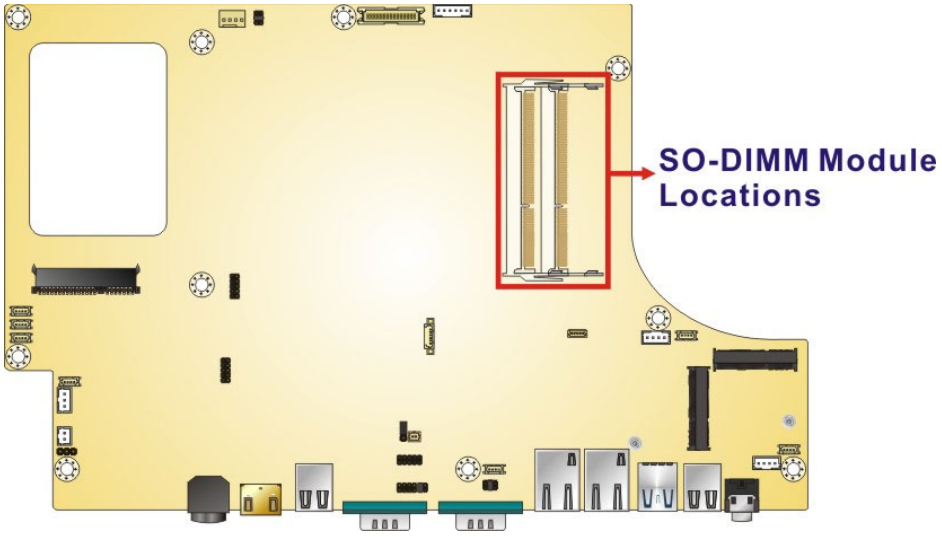

Figure 5-1: SO-DIMM Module Locations

Step 3: Push the two handles outwards. The memory module is ejected by a mechanism in the socket.

Step 4: Grasp the SO-DIMM module by the edges and carefully pull it out of the socket.

Step 5: Align the new SO-DIMM so the notch on the memory lines up with the notch on the memory socket (**Figure 5-2**).

Step 6: Push the memory in at a 20º angle (**Figure 5-2**).

Step 7: Gently push downwards and the arms clip into place (**Figure 5-2**).

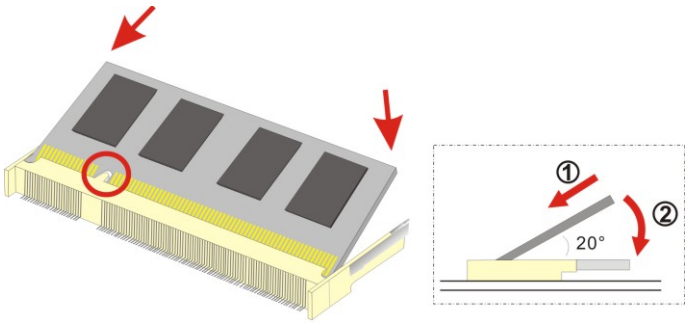

Figure 5-2: SO-DIMM Module Installation

5.5 WLAN Card Replacement

The AFL3-W15B-H81 has one WLAN card slot. To replace the WLAN card, follow the instructions below.

Step 1: Follow all anti-static procedures. See **Section 5.2**.

Step 2: Turn off the power. See **Section 5.3**.

Step 3: Remove the back cover. Refer to **Section 3.4**.

Step 4: Locate the WLAN card (**Figure 5-3**).

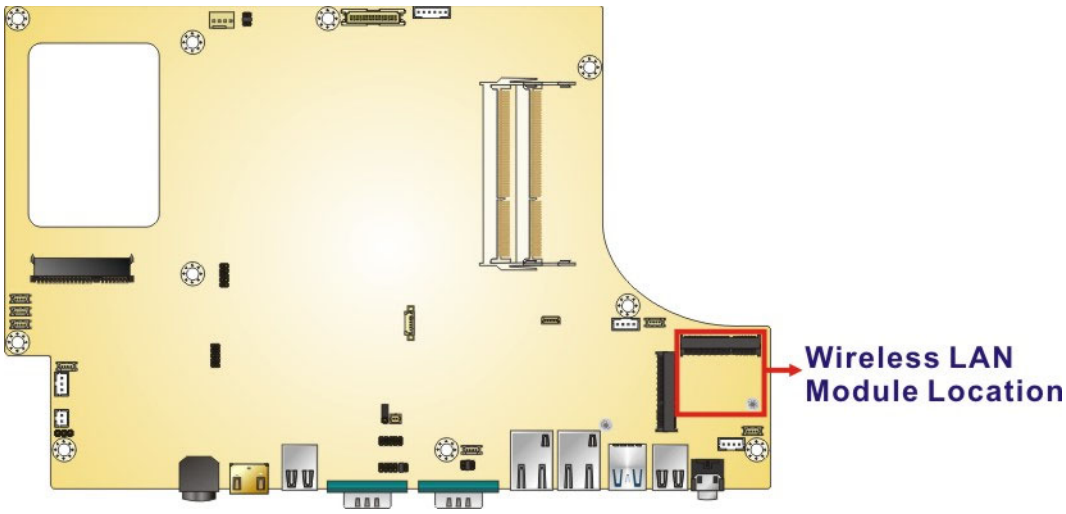

Figure 5-3: WLAN Card Location

Step 5: Disconnect the antenna cables on the WLAN module and remove the retention screw to release the WLAN card (**Figure 5-4**).

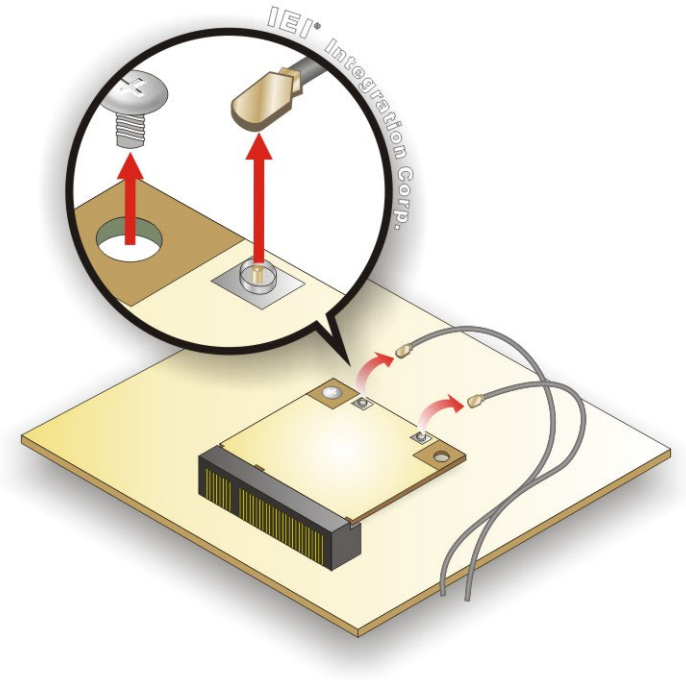

Figure 5-4: Releasing the WLAN Card

Step 6: Grasp the WLAN card by the edges and carefully pull it out of the socket (**Figure 5-5**).

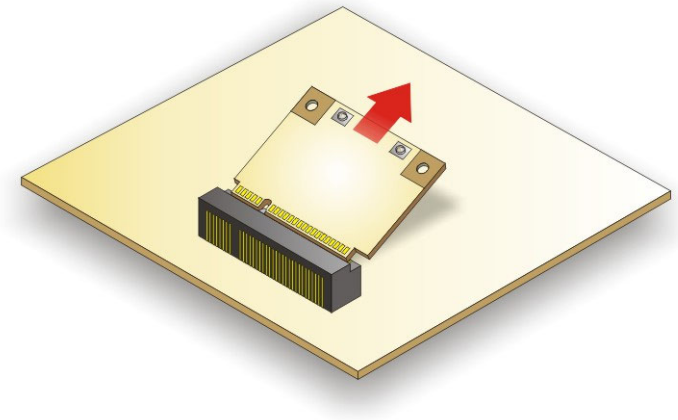

Figure 5-5: Removing the WLAN Card

Step 7: Install a new WLAN card by inserting the card into the slot at an angle.

Step 8: Push the WLAN card down and secure it with the previously removed retention screw.

Step 9: Connect the antenna cables.

Step 10: Replace the back cover and secure it using the previously removed retention screws.

5.6 Reinstalling the Cover

WARNING:

Failing to reinstall the cover may result in permanent damage to the system. Please make sure all coverings are properly installed.

When maintenance procedures are complete, please make sure the plastic back cover is replaced

Chapter

6

Interface Connectors

6.1 Peripheral Interface Connectors

The AFL3-W15B-H81 panel PC motherboard comes with a number of peripheral interface connectors and configuration jumpers. The connector locations are shown in **Figure 6-1** and **Figure 6-2**. The Pin 1 locations of the on-board connectors are also indicated in the diagrams below. The connector pinouts for these connectors are listed in the following sections.

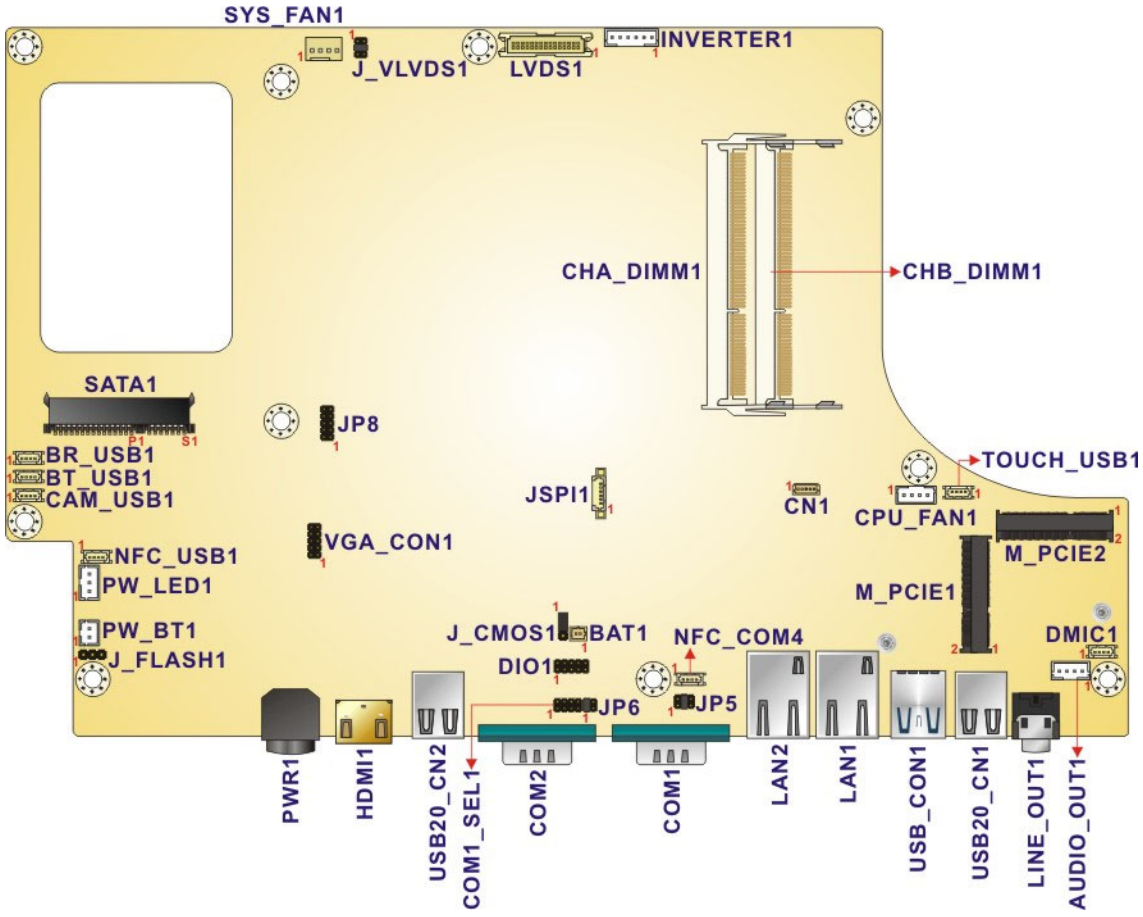

Figure 6-1: Main Board Layout Diagram (Front Side)

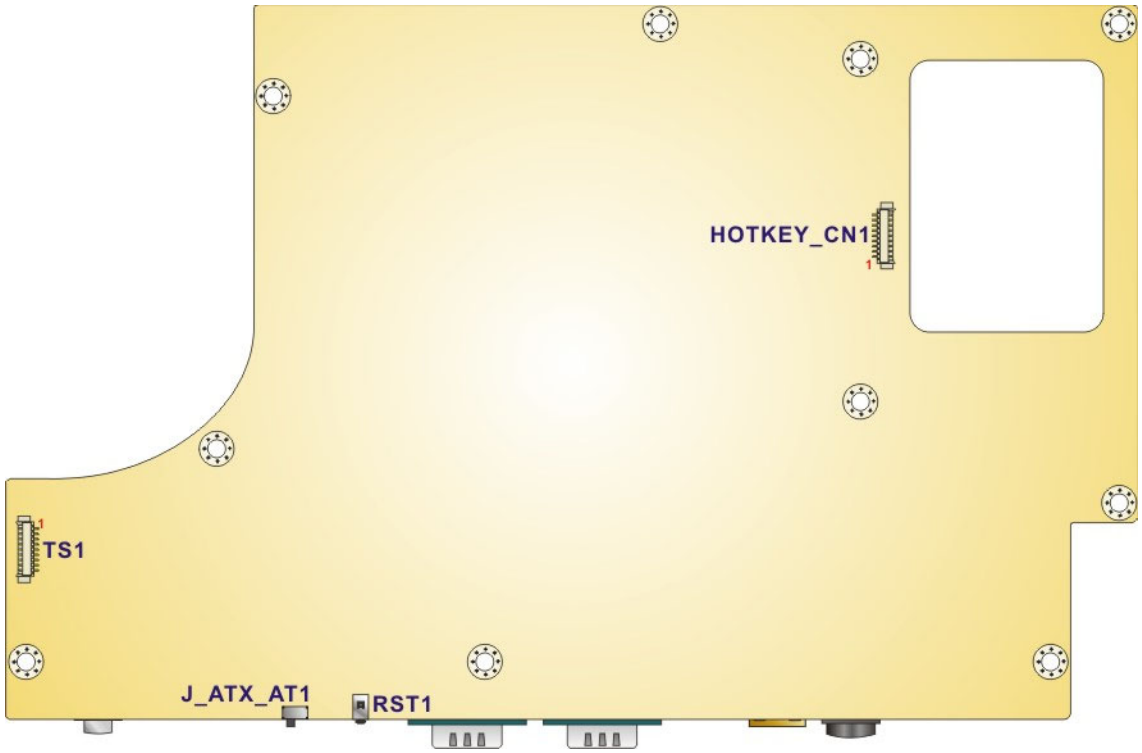

Figure 6-2: Main Board Layout Diagram (Solder Side)

6.2 Internal Peripheral Connectors

Internal peripheral connectors are found on the motherboard and are only accessible when the motherboard is outside of the chassis. The table below shows a list of the peripheral interface connectors on the motherboard of AFL3-W15B-H81. Pinouts of these connectors can be found in the following sections.

Connector	Type	Label
Battery connector	2-pin wafer	BAT1
Digital I/O connector	10-pin header	DIO1
Fan connector (CPU)	4-pin wafer	CPU_FAN1
Fan connector (system)	4-pin wafer	SYS_FAN1
Hotkey connector	9-pin wafer	HOTKEY_CN1
Inverter connector	6-pin wafer	INVERTER1
LVDS connector	30-pin crimp	LVDS1

Connector	Type	Label
MCU firmware connector	10-pin header	JP8
Microphone connector	4-pin wafer	DMIC1
PCIe Mini/mSATA slot	Half-size PCIe Mini slot	M_PCIE1
PCIe Mini slot	Half-size PCIe Mini slot	M_PCIE2
Power LED connector	3-pin wafer	PW_LED1
Power button connector	2-pin wafer	PW_BT1
SATA signal and power connector	7-pin+15-pin connector	SATA1
SO-DIMM slots	SO-DIMM slot	CHA_DIMM1, CHB_DIMM1
SMBus connector	5-pin wafer	CN1
Speaker connector	4-pin wafer	AUDIO_OUT1
SPI flash connector	6-pin wafer	JSPI1
Touchscreen connector	9-pin wafer	TS1
TTL serial connector	4-pin wafer	NFC_COM4
USB connector for barcode reader	4-pin wafer	BR_USB1
USB connector for Bluetooth	4-pin wafer	BT_USB1
USB connector for camera	4-pin wafer	CAM_USB1
USB connector for NFC	4-pin wafer	NFC_USB1
USB connector for touchscreen	4-pin wafer	TOUCH_USB1
VGA connector	10-pin header	VGA_CON1

Table 6-1: Peripheral Interface Connectors

6.2.1 Battery Connector (BAT1)

PIN NO.	DESCRIPTION
1	VBATT
2	GND

Table 6-2: Battery Connector (BAT1) Pinouts

6.2.2 Digital I/O Connector (DIO1)

PIN NO.	DESCRIPTION	PIN NO.	DESCRIPTION
1	GND	2	+5V
3	DOUT3	4	DOUT2
5	DOUT1	6	DOUT0
7	DIN3	8	DIN2
9	DIN1	10	DIN0

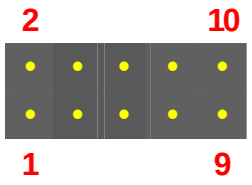

Table 6-3: Digital I/O Connector (DIO1) Pinouts

6.2.3 Fan Connector (CPU_FAN1)

PIN NO.	DESCRIPTION
1	PWM control signal
2	Rotation signal
3	+V12S
4	GND

Table 6-4: Fan Connector (CPU_FAN1) Pinouts

6.2.4 Fan Connector (SYS_FAN1)

PIN NO.	DESCRIPTION
1	GND
2	+V12S
3	Rotation signal
4	PWM control signal

Table 6-5: Fan Connector (SYS_FAN1) Pinouts

6.2.5 Hotkey Connector (HOTKEY_CN1)

PIN NO.	DESCRIPTION
1	+5V
2	AUTO_DIMMING
3	VOL+

4	VOL-
5	BRIGHT+
6	BRIGHT1
7	LCD ON_OFF
8	N/A
9	GND

Table 6-6: Hotkey Connector (HOTKEY_CN1) Pinouts

6.2.6 Inverter Connector (INVERTER1)

PIN NO.	DESCRIPTION
1	+12V
2	+12V
3	BRIGHTNESS
4	ENABKL
5	GND
6	GND

Table 6-7: Inverter Connector (INVERTER1) Pinouts

6.2.7 LVDS Connector (LVDS1)

PIN NO.	DESCRIPTION	PIN NO.	DESCRIPTION
1	GND	2	GND
3	A_Y0	4	A_Y0#
5	A_Y1	6	A_Y1#
7	A_Y2	8	A_Y2#
9	A_CK	10	A_CK#
11	A_Y3	12	A_Y3#
13	GND	14	GND
15	B_Y0	16	B_Y0#
17	B_Y1	18	B_Y1#
19	B_Y2	20	B_Y2#
21	B_CK	22	B_CK#

23	B_Y3	24	B_Y3#
25	GND	26	GND
27	VCC/VCC3	28	VCC/VCC3
29	VCC/VCC3	30	VCC/VCC3

Table 6-8: LVDS Connector (LVDS1) Pinouts

6.2.8 MCU Firmware Connector (JP8)

PIN NO.	DESCRIPTION	PIN NO.	DESCRIPTION
1	MCLR	2	VCC3_MCU
3	VCC5_MCU	4	MCU_IR
5	GND	6	AUTO_CLK
7	ICSPCLK	8	AUTO_DATA
9	ICSPDAT	10	GND

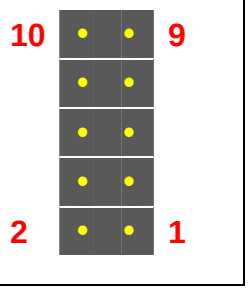

Table 6-9: MCU Firmware Connector (JP8) Pinouts

6.2.9 Microphone Connector (DMIC1)

PIN NO.	DESCRIPTION
1	DMIC_CLK
2	DMIC_DATA
3	+3.3V
4	GND

Table 6-10: Microphone Connector (DMIC1) Pinouts

6.2.10 PCIe Mini/mSATA Slot (M_PCIE1)

PIN NO.	DESCRIPTION	PIN NO.	DESCRIPTION
1	PCIE_WAKE#	2	VCC3
3	N/C	4	GND
5	N/C	6	1.5V
7	N/C	8	N/C
9	GND	10	N/C
11	CLK-	12	N/C

13	CLK+	14	N/C
15	GND	16	N/C
17	PCIRST#	18	GND
19	N/C	20	VCC3
21	GND	22	PCIRST#
23	PERN (SATA_RX4+)	24	3VDual
25	PERP (SATA_RX4-)	26	GND
27	GND	28	1.5V
29	GND	30	SMBCLK
31	PETN (SATA_TX4-)	32	SMBDATA
33	PETP (SATA_TX4+)	34	GND
35	GND	36	USBD10-
37	N/C	38	USBD10+
39	N/C	40	GND
41	N/C	42	N/C
43	SATA_DET4_R_N	44	N/C
45	N/C	46	N/C
47	N/C	48	1.5V
49	N/C	50	GND
51	MSATA_SEL#	52	VCC3

Table 6-11: PCIe Mini/mSATA Slot (M_PCIE1) Pinouts

6.2.11 PCIe Mini Slot (M_PCIE2)

PIN NO.	DESCRIPTION	PIN NO.	DESCRIPTION
1	PCIE_WAKE#	2	VCC3
3	N/C	4	GND
5	N/C	6	1.5V
7	N/C	8	N/C
9	GND	10	N/C
11	CLK-	12	N/C
13	CLK+	14	N/C
15	GND	16	N/C
17	PCIRST#	18	GND

19	N/C	20	VCC3
21	GND	22	PCIRST#
23	PERN2	24	3VDual
25	PERP2	26	GND
27	GND	28	1.5V
29	GND	30	SMBCLK
31	PETN2	32	SMBDATA
33	PETP2	34	GND
35	GND	36	USBD11-
37	N/C	38	USBD11+
39	N/C	40	GND
41	N/C	42	N/C
43	N/C	44	N/C
45	N/C	46	N/C
47	N/C	48	1.5V
49	N/C	50	GND
51	MSATA_SEL#	52	VCC3

Table 6-12: PCIe Mini Slot (M_PCIE2) Pinouts

6.2.12 Power LED Connector (PW_LED1)

PIN NO.	DESCRIPTION
1	PW_LED +5V
2	GND
3	SUS PW LED +5V

Table 6-13: Power LED Connector (PW_LED1) Pinouts

6.2.13 Power Button Connector (PW_BT1)

PIN NO.	DESCRIPTION
1	PW_BN
2	GND

Table 6-14: Power Button Connector (PW_BT1) Pinouts

6.2.14 SATA Signal and Power Connector (SATA1)

PIN NO.	DESCRIPTION	PIN NO.	DESCRIPTION
S1	GND	P1	VCC3
S2	TX+	P2	VCC3
S3	TX-	P3	VCC3
S4	GND	P4	GND
S5	RX-	P5	GND
S6	RX+	P6	GND
S7	GND	P7	VCC5
		P8	VCC5
		P9	VCC5
		P10	GND
		P11	GND
		P12	GND
		P13	VCC12
		P14	VCC12
		P15	VCC12

Table 6-15: SATA Signal and Power Connector (SATA1) Pinouts

6.2.15 SMBus Connector (CN1)

PIN NO.	DESCRIPTION
1	+V5S
2	GPIO38
3	GND
4	SMB_CLK
5	SMB_DATA

Table 6-16: SMBus Connector (CN1) Pinouts

6.2.16 Speaker Connector (AUDIO_OUT1)

PIN NO.	DESCRIPTION
1	SPK_OUT_P_L
2	SPK_OUT_N_L
3	SPK_OUT_N_R
4	SPK_OUT_P_R

Table 6-17: Speaker Connector (AUDIO_OUT1) Pinouts

6.2.17 SPI Flash Connector (JSPI1)

PIN NO.	DESCRIPTION
1	+V3.3M_SPI_CON
2	SPI_CS#0_CN
3	SPI_SO_SW
4	SPI_CLK_SW
5	SPI_SI_SW
6	GND

Table 6-18: SPI Flash Connector (JSPI1) Pinouts

6.2.18 TTL Serial Connector (NFC_COM4)

PIN NO.	DESCRIPTION
1	+V5S
2	SIN4
3	SOUT4
4	GND

Table 6-19: TTL Serial Connector (NFC_COM4) Pinouts

6.2.19 USB Connector for Barcode Reader (BR_USB1)

PIN NO.	DESCRIPTION
1	+5
2	HUB_D3F-
3	HUB_D3F+
4	GND

Table 6-20: USB Connector for Barcode Reader (BR_USB1) Pinouts

6.2.20 USB Connector for Bluetooth (BT_USB1)

PIN NO.	DESCRIPTION
1	+3.3
2	HUB_D1F-
3	HUB_D1F+
4	GND

Table 6-21: USB Connector for Bluetooth (BT_USB1) Pinouts

6.2.21 USB Connector for Camera (CAM_USB1)

PIN NO.	DESCRIPTION
1	+3.3
2	HUB_D2F-
3	HUB_D2F+
4	GND

Table 6-22: USB Connector for Camera (CAM_USB1) Pinouts

6.2.22 USB Connector for NFC (NFC_USB1)

PIN NO.	DESCRIPTION
1	+5
2	HUB_D4F-
3	HUB_D4F+
4	GND

Table 6-23: USB Connector for NFC (NFC_USB1) Pinouts

6.2.23 USB Connector for Touchscreen (TOUCH_USB1)

PIN NO.	DESCRIPTION
1	+5
2	D8F-
3	D8F+
4	GND

Table 6-24: USB Connector for Touchscreen (TOUCH_USB1) Pinouts

6.2.24 VGA Connector (VGA_CON1)

PIN NO.	DESCRIPTION	PIN NO.	DESCRIPTION
1	RED	2	DDCDAT
3	GREEN	4	DDCCLK
5	BLUE	6	GND
7	HSYNC	8	GND
9	VSYNC	10	GND

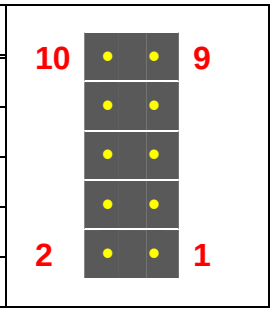

Table 6-25: VGA Connector (VGA_CON1) Pinouts

6.3 External Interface Panel Connectors

The table below lists the rear panel connectors on the motherboard of AFL3-W15B-H81. Pinouts of these connectors can be found in the following sections.

Connector	Type	Label
AT/ATX mode selection switch	Switch	J_ATX_AT1
Audio connector	Line-out jack	LINE_OUT1
GbE connectors	RJ-45	LAN1, LAN2
HDMI connector	HDMI	HDMI1
Power connector	4-pin DIN	PWR1
Reset button	Push button	RST1
RS-232 serial port	D-sub 9	COM2
RS-232/422/485 serial port	D-sub 9	COM1
USB 2.0 connectors	USB 2.0 port	USB20_CN1, USB20_CN2
USB 3.0 connectors	USB 3.0 port	USB_CON1

Table 6-26: Rear Panel Connectors

6.3.1 GbE Connectors (LAN1 & LAN2)

PIN NO.	DESCRIPTION	PIN NO.	DESCRIPTION
1	MDI0+	10	MDI3-
2	MDI0-	11	+3.3Vsus
3	MDI1+	12	ACT-1
4	MDI1-	13	LINK1000+3.3Vsus
5	N/A	14	LINK100+3.3Vsus
6	N/A	15	GND
7	MDI2+	16	GND
8	MDI2-	17	N/A
9	MDI3+	18	N/A

Table 6-27: GbE Connectors (LAN1 & LAN2) Pinouts

6.3.2 HDMI Connector (HDMI1)

PIN NO.	DESCRIPTION	PIN NO.	DESCRIPTION
1	HDMI_DATA2+	11	GND
2	GND	12	HDMI_CLK#
3	HDMI_DATA2#-	13	N/C
4	HDMI_DATA1+	14	N/C
5	GND	15	HDMI_SCL
6	HDMI_DATA1#-	16	HDMI_SDA
7	HDMI_DATA0+	17	GND
8	GND	18	+5VCC
9	HDMI_DATA0#-	19	HDMI_HPD
10	HDMI_CLK+		

Table 6-28: HDMI Connector (HDMI1) Pinouts

6.3.3 Power Connector (PWR1)

PIN NO.	DESCRIPTION	PIN NO.	DESCRIPTION	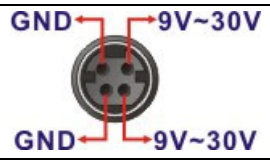
1	9~30V	3	9~30V	
2	GND	4	GND	

Table 6-29: Power Connector (PWR1) Pinouts

6.3.4 RS-232 Serial Port (COM2)

PIN NO.	DESCRIPTION	PIN NO.	DESCRIPTION	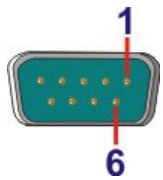
1	-NDCD2	6	-NDTR2	
2	NSIN2	7	-NRTS2	
3	NSOUT2	8	-NCTS2	
4	-NDSR2	9	-XRI2	
5	GND			

Table 6-30: RS-232 DB-9 Serial Port (COM2) Pinouts

6.3.5 RS-232/422/485 DB-9 Serial Port (COM1)

PIN NO.	DESCRIPTION	PIN NO.	DESCRIPTION
1	-NDCD1	6	-NDSR1
2	NSIN1	7	-NRTS1
3	NSOUT1	8	-NCTS1
4	-NDTR1	9	-XRI1
5	GND		

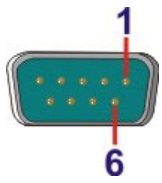

Table 6-31: RS-232/422/485 DB-9 Serial Port (COM1) Pinouts

6.3.6 USB 2.0 Connectors (USB20_CN1)

PIN NO.	DESCRIPTION	PIN NO.	DESCRIPTION
1	+5	2	D2F-
3	D2F+	4	GND
5	+5	6	D3F-
7	D3F+	8	GND

Table 6-32: USB 2.0 Connectors (USB20_CN1) Pinouts

6.3.7 USB 2.0 Connectors (USB20_CN2)

PIN NO.	DESCRIPTION	PIN NO.	DESCRIPTION
1	+5	2	GND
3	D4F+	4	D5F+
5	D4F+	6	D5F-
7	GND	8	+5

Table 6-33: USB 2.0 Connectors (USB20_CN2) Pinouts

6.3.8 USB 3.0 Connectors (USB_CON1)

PIN NO.	DESCRIPTION	PIN NO.	DESCRIPTION
1	+5	2	2.0_D1-
3	2.0_D1+	4	GND
5	3.0_RX1-	6	3.0_RX1+

7	GND	8	3.0_TX1-
9	3.0_TX1+	10	+5
11	2.0_D2-	12	2.0_D2+
13	GND	14	3.0_RX2-
15	3.0_RX2+	16	GND
17	3.0_TX2-	18	3.0_TX2+

Table 6-34: USB 3.0 Connectors (USB_CON1) Pinouts

6.4 Preconfigured Jumper Settings

CAUTION:

The following jumpers are preconfigured for the AFL3-W15B-H81. Users should not change these jumpers (**Table 6-35**). It is only for reference.

Jumper Name	Type	Label
Flash descriptor security override	3-pin header	J_FLASH1
LVDS voltage selection	6-pin header	J_VLVDS1

Table 6-35: Preconfigured Jumpers

6.4.1 Flash Descriptor Security Override Jumper (J_FLASH1)

Pin	Description
Short 1-2	Disabled (Default)
Short 2-3	Enabled

Table 6-36: Flash Descriptor Security Override Jumper (J_FLASH1) Settings

6.4.2 LVDS Panel Voltage Selection Jumper (J_VLVDS1)

Pin	Description
Short 1-2	+3.3V (Default)
Short 3-4	+5V
Short 5-6	+12V

Table 6-37: LVDS Panel Voltage Selection Jumper (J_VLVDS1) Settings

Appendix

A

Regulatory Compliance

DECLARATION OF CONFORMITY

CE

This equipment is in conformity with the following EU directives:

- EMC Directive (2004/108/EC, 2014/30/EU)
- Low-Voltage Directive (2006/95/EC, 2014/35/EU)
- RoHS II Directive (2011/65/EU, 2015/863/EU)

If the user modifies and/or install other devices in the equipment, the CE conformity declaration may no longer apply.

If this equipment has telecommunications functionality, it also complies with the requirements of the Radio Equipment Directive 2014/53/EU.

English IEI Integration Corp declares that this equipment is in compliance with the essential requirements and other relevant provisions of Directive 2014/53/EU.
Български [Bulgarian] IEI Integration Corp. декларира, че този оборудване е в съответствие със съществените изисквания и другите приложими правила на Директива 2014/53/EU.
Česky [Czech] IEI Integration Corp tímto prohlašuje, že tento zařízení je ve shodě se základními požadavky a dalšími příslušnými ustanoveními směrnice 2014/53/EU.
Dansk [Danish] IEI Integration Corp erklærer herved, at følgende udstyr overholder de væsentlige krav og øvrige relevante krav i direktiv 2014/53/EU.
Deutsch [German] IEI Integration Corp, erklärt dieses Gerät entspricht den grundlegenden Anforderungen und den weiteren entsprechenden Vorgaben der Richtlinie 2014/53/EU.
Eesti [Estonian] IEI Integration Corp deklareerib seadme seadme vastavust direktiivi 2014/53/EÜ põhinõuetele ja nimetatud direktiivist tulenevatele teistele asjakohastele sätetele.

Español [Spanish] IEI Integration Corp declara que el equipo cumple con los requisitos esenciales y cualesquiera otras disposiciones aplicables o exigibles de la Directiva 2014/53/EU.
Ελληνική [Greek] IEI Integration Corp ΔΗΛΩΝΕΙ ΟΤΙ ΕΞΟΠΛΙΣΜΟΣ ΣΥΜΜΟΡΦΩΝΕΤΑΙ ΠΡΟΣ ΤΙΣ ΟΥΣΙΩΔΕΙΣ ΑΠΑΙΤΗΣΕΙΣ ΚΑΙ ΤΙΣ ΛΟΙΠΕΣ ΣΧΕΤΙΚΕΣ ΔΙΑΤΑΞΕΙΣ ΤΗΣ ΟΔΗΓΙΑΣ 2014/53/EU.
Français [French] IEI Integration Corp déclare que l'appareil est conforme aux exigences essentielles et aux autres dispositions pertinentes de la directive 2014/53/EU.
Italiano [Italian] IEI Integration Corp dichiara che questo apparecchio è conforme ai requisiti essenziali ed alle altre disposizioni pertinenti stabilite dalla direttiva 2014/53/EU.
Latviski [Latvian] IEI Integration Corp deklarē, ka iekārta atbilst būtiskajām prasībām un citiem ar to saistītajiem noteikumiem Direktīvas 2014/53/EU.
Lietuvių [Lithuanian] IEI Integration Corp deklaruoja, kad šis įranga atitinka esminius reikalavimus ir kitas 2014/53/EU Direktyvos nuostatas.
Nederlands [Dutch] IEI Integration Corp dat het toestel toestel in overeenstemming is met de essentiële eisen en de andere relevante bepalingen van richtlijn 2014/53/EU.
Malti [Maltese] IEI Integration Corp jiddikjara li dan prodott jikkonforma mal-ħtiġijiet essenzjali u ma provvedimenti oħrajn relevanti li hemm fid-Dirrettiva 2014/53/EU.
Magyar [Hungarian] IEI Integration Corp nyilatkozom, hogy a berendezés megfelel a vonatkozó alapvetõ követelményeknek és az 2014/53/EU irányelv egyéb elõírásainak.
Polski [Polish] IEI Integration Corp oświadcza, że wyrobu jest zgodny z zasadniczymi wymogami oraz pozostałymi stosownymi postanowieniami Dyrektywy 2014/53/EU.
Português [Portuguese] IEI Integration Corp declara que este equipamento está conforme com os requisitos essenciais e outras disposições da Directiva 2014/53/EU.

Româna [Romanian] IEI Integration Corp declară că acest echipament este in conformitate cu cerințele esențiale şi cu celelalte prevederi relevante ale Directivei 2014/53/EU.
Slovensko [Slovenian] IEI Integration Corp izjavlja, da je ta opreme v skladu z bistvenimi zahtevami in ostalimi relevantnimi določili direktive 2014/53/EU.
Slovensky [Slovak] IEI Integration Corp týmto vyhlasuje, že zariadenia spĺňa základné požiadavky a všetky príslušné ustanovenia Smernice 2014/53/EU.
Suomi [Finnish] IEI Integration Corp vakuuttaa täten että laitteet on direktiivin 2014/53/EU oleellisten vaatimusten ja sitä koskevien direktiivin muiden ehtojen mukainen.
Svenska [Swedish] IEI Integration Corp förklarar att denna utrustningstyp står I överensstämmelse med de väsentliga egenskapskrav och övriga relevanta bestämmelser som framgår av direktiv 2014/53/EU.

FCC WARNING

This equipment complies with Part 15 of the FCC Rules. Operation is subject to the following two conditions:

- This device may not cause harmful interference, and
- This device must accept any interference received, including interference that may cause undesired operation.

This equipment has been tested and found to comply with the limits for a Class A digital device, pursuant to part 15 of the FCC Rules. These limits are designed to provide reasonable protection against harmful interference when the equipment is operated in a commercial environment. This equipment generates, uses, and can radiate radio frequency energy and, if not installed and used in accordance with the instruction manual, may cause harmful interference to radio communications. Operation of this equipment in a residential area is likely to cause harmful interference in which case the user will be required to correct the interference at his own expense.

Federal Communication Commission Interference Statement

This equipment has been assembled with components that comply with the limits for a Class B digital device, pursuant to Part 15 of the FCC Rules. These limits are designed to provide reasonable protection against harmful interference in a residential installation. This equipment generates, uses and can radiate radio frequency energy and, if not installed and used in accordance with the instructions, may cause harmful interference to radio communications. However, there is no guarantee that interference will not occur in a particular installation. If this equipment does cause harmful interference to radio or television reception, which can be determined by turning the equipment off and on, the user is encouraged to try to correct the interference by one of the following measures:

- Reorient or relocate the receiving antenna.
- Increase the separation between the equipment and receiver.
- Connect the equipment into an outlet on a circuit different from that to which the receiver is connected.
- Consult the dealer or an experienced radio/TV technician for help.

Appendix

B

Safety Precautions

WARNING:

The precautions outlined in this chapter should be strictly followed. Failure to follow these precautions may result in permanent damage to the AFL3-W15B-H81.

B.1 Safety Precautions

Please follow the safety precautions outlined in the sections that follow:

B.1.1 General Safety Precautions

Please ensure the following safety precautions are adhered to at all times.

- ***Follow the electrostatic precautions*** outlined below whenever the device is opened.
- ***Make sure the power is turned off and the power cord is disconnected*** whenever the AFL3-W15B-H81 is being installed, moved or modified.
- ***To prevent the risk of electric shock, make sure power cord is unplugged from wall socket.*** To fully disengage the power to the unit, please disconnect the power cord from the AC outlet. Refer servicing to qualified service personnel. The AC outlet shall be readily available and accessible.
- ***Do not apply voltage levels that exceed the specified voltage range***. Doing so may cause fire and/or an electrical shock. Use a power cord that matches the voltage of the power outlet, which has been approved and complies with the safety standard of your particular country.
- ***Electric shocks can occur*** if the AFL3-W15B-H81 chassis is opened when it is running. To avoid risk of electric shock, this device must only be connected to a supply mains with protective earth.
- ***Do not drop or insert any objects*** into the ventilation openings of the AFL3-W15B-H81.

- ***If considerable amounts of dust, water, or fluids enter the* device**, turn off the power supply immediately, unplug the power cord, and contact the AFL3-W15B-H81 vendor.
- **DO NOT**:
  - Drop the device against a hard surface.
  - Strike or exert excessive force onto the LCD panel.
  - Touch any of the LCD panels with a sharp object
  - In a site where the ambient temperature exceeds the rated temperature

B.1.2 Anti-static Precautions

WARNING:

Failure to take ESD precautions during the installation of the AFL3-W15B-H81 may result in permanent damage to the AFL3-W15B-H81 and severe injury to the user.

Electrostatic discharge (ESD) can cause serious damage to electronic components, including the AFL3-W15B-H81. Dry climates are especially susceptible to ESD. It is therefore critical that whenever the AFL3-W15B-H81 is opened and any of the electrical components are handled, the following anti-static precautions are strictly adhered to.

- ***Wear an anti-static wristband***: Wearing a simple anti-static wristband can help to prevent ESD from damaging any electrical component.
- ***Self-grounding***: Before handling any electrical component, touch any grounded conducting material. During the time the electrical component is handled, frequently touch any conducting materials that are connected to the ground.
- ***Use an anti-static pad***: When configuring or working with an electrical component, place it on an anti-static pad. This reduces the possibility of ESD damage.
- ***Only handle the edges of the electrical component***: When handling the electrical component, hold the electrical component by its edges.

B.1.3 Product Disposal

CAUTION:

Risk of explosion if battery is replaced by an incorrect type. Only certified engineers should replace the on-board battery.

Dispose of used batteries according to instructions and local regulations.

- Outside the European Union – If you wish to dispose of used electrical and electronic products outside the European Union, please contact your local authority so as to comply with the correct disposal method.
- Within the European Union – The device that produces less waste and is easier to recycle is classified as electronic device in terms of the European Directive 2012/19/EU (WEEE), and must not be disposed of as domestic garbage.

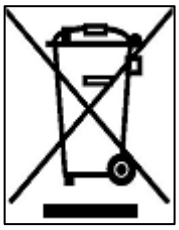

EU-wide legislation, as implemented in each Member State, requires that waste electrical and electronic products carrying the mark (left) must be disposed of separately from normal household waste. This includes monitors and electrical accessories, such as signal cables or power cords. When you need to dispose of your display products, please follow the guidance of your local authority, or ask the shop where you purchased the product. The mark on electrical and electronic products only applies to the current European Union Member States.

Please follow the national guidelines for electrical and electronic product disposal.

B.2 Maintenance and Cleaning Precautions

When maintaining or cleaning the AFL3-W15B-H81, please follow the guidelines below.

WARNING:

- For safety reasons, turn-off the power and unplug the panel PC before cleaning.
- If you dropped any material or liquid such as water onto the panel PC when cleaning, unplug the power cable immediately and contact your dealer or the nearest service center. Always make sure your hands are dry when unplugging the power cable.

B.2.1 Maintenance and Cleaning

Prior to cleaning any part or component of the AFL3-W15B-H81, please read the details below.

- Except for the LCD panel, never spray or squirt liquids directly onto any other components. To clean the LCD panel, gently wipe it with a piece of soft dry cloth or a slightly moistened cloth.
- The interior of the device does not require cleaning. Keep fluids away from the device interior.
- Be cautious of all small removable components when vacuuming the device.
- Never drop any objects or liquids through the openings of the device.
- Be cautious of any possible allergic reactions to solvents or chemicals used when cleaning the device.
- Avoid eating, drinking and smoking within vicinity of the device.

B.2.2 Cleaning Tools

Some components in the AFL3-W15B-H81 may only be cleaned using a product specifically designed for the purpose. In such case, the product will be explicitly mentioned in the cleaning tips. Below is a list of items to use when cleaning the AFL3-W15B-H81.

- ***Cloth*** – Although paper towels or tissues can be used, a soft, clean piece of cloth is recommended when cleaning the device.

- ***Water or rubbing alcohol*** – A cloth moistened with water or rubbing alcohol can be used to clean the device.
- ***Using solvents*** – The use of solvents is not recommended when cleaning the device as they may damage the plastic parts.
- ***Vacuum cleaner*** – Using a vacuum specifically designed for computers is one of the best methods of cleaning the device. Dust and dirt can restrict the airflow in the device and cause its circuitry to corrode.
- ***Cotton swabs*** – Cotton swaps moistened with rubbing alcohol or water are excellent tools for wiping hard to reach areas.
- **Foam swabs** – Whenever possible, it is best to use lint free swabs such as foam swabs for cleaning.

Appendix

C

BIOS Menu Options

System Date [xx/xx/xx] 50
System Time [xx:xx:xx] 50
ACPI Sleep State [S1 only (CPU Stop Clock)] 51
Wake system with Fixed Time [Disabled] 52
Hyper-threading [Enabled] 53
Active Processor Cores [All] 54
Intel Virtualization Technology [Disabled] 54
EIST [Enabled] 54
SATA Controller(s) [Enabled] 55
SATA Mode Selection [IDE] 55
Intel(R) Rapid Start Technology [Disabled] 56
USB Devices 57
Legacy USB Support [Enabled] 57
Serial Port [Enabled] 59
Change Settings [Auto] 59
Device Mode [RS232] 60
Serial Port [Enabled] 60
Change Settings [Auto] 60
Serial Port [Enabled] 61
Change Settings [Auto] 61
PC Health Status 62
CPU_FAN1 Smart Fan Control/SYS_FAN1 Smart Fan Control [Auto Duty-Cycle Mode] 63
CPU Temperature 1/2/3/4 64
System Temperature 1/2/3/4 64
Console Redirection [Disabled] 65
Terminal Type [ANSI] 65
Bits per second [115200] 66
Data Bits [8] 66
Parity [None] 66
Stop Bits [1] 67
Auto Recovery Function [Disabled] 67
Restore AC Power Loss [Last State] 69
PCIe Speed [Auto] 71
Detect Non-Compliance Device [Disbled] 71

Azalia (HD Audio) [Enabled] 72
VT-d [Disabled] 73
Primary Display [Auto] 74
DVMT Pre-Allocated [256M] 74
DVMT Total Gfx Mem [MAX] 75
Primary IGFX Boot Display [VBIOS Default] 76
Bootup NumLock State [On] 77
Quiet Boot [Enabled] 78
Option ROM Messages [Force BIOS] 78
Launch PXE OpROM [Disabled] 78
UEFI Boot [Disabled] 78
Administrator Password 79
User Password 79
Save Changes and Reset 80
Discard Changes and Reset 80
Restore Defaults 80
Save as User Defaults 80
Restore User Defaults 80

Appendix

D

Watchdog Timer

NOTE:

The following discussion applies to DOS. Contact IEI support or visit the IEI website for drivers for other operating systems.

The Watchdog Timer is a hardware-based timer that attempts to restart the system when it stops working. The system may stop working because of external EMI or software bugs. The Watchdog Timer ensures that standalone systems like ATMs will automatically attempt to restart in the case of system problems.

A BIOS function call (INT 15H) is used to control the Watchdog Timer.

INT 15H:

AH – 6FH Sub-function:	
AL – 2:	Sets the Watchdog Timer's period.
BL:	Time-out value (Its unit-second is dependent on the item "Watchdog Timer unit select" in CMOS setup).

Table D-1: AH-6FH Sub-function

Call sub-function 2 to set the time-out period of Watchdog Timer first. If the time-out value is not zero, the Watchdog Timer starts counting down. When the timer value reaches zero, the system resets. To ensure that this reset condition does not occur, calling sub-function 2 must periodically refresh the Watchdog Timer. However, the watchdog timer is disabled if the time-out value is set to zero.

A tolerance of at least 10% must be maintained to avoid unknown routines within the operating system (DOS), such as disk I/O that can be very time-consuming.

NOTE:

The Watchdog Timer is activated through software. The software application that activates the Watchdog Timer must also deactivate it when closed. If the Watchdog Timer is not deactivated, the system will automatically restart after the Timer has finished its countdown.

EXAMPLE PROGRAM:

```
; INITIAL TIMER PERIOD COUNTER

;
W_LOOP:
;

        MOV     AX, 6F02H       ;setting the time-out value
        MOV     BL, 30          ;time-out value is 48 seconds
        INT     15H

;
; ADD THE APPLICATION PROGRAM HERE
;

        CMP     EXIT_AP, 1      ;is the application over?
        JNE     W_LOOP          ;No, restart the application

        MOV     AX, 6F02H       ;disable Watchdog Timer
        MOV     BL, 0           ;
        INT     15H

;
; EXIT ;
```

Appendix

E

Hazardous Materials Disclosure

The details provided in this appendix are to ensure that the product is compliant with the Peoples Republic of China (China) RoHS standards. The table below acknowledges the presences of small quantities of certain materials in the product, and is applicable to China RoHS only.

A label will be placed on each product to indicate the estimated "Environmentally Friendly Use Period" (EFUP). This is an estimate of the number of years that these substances would "not leak out or undergo abrupt change." This product may contain replaceable sub-assemblies/components which have a shorter EFUP such as batteries and lamps. These components will be separately marked.

Please refer to the following table.

Part Name	Toxic or Hazardous Substances and Elements					
	Lead (Pb)	Mercury (Hg)	Cadmium (Cd)	Hexavalent Chromium (CR(VI))	Polybrominated Biphenyls (PBB)	Polybrominated Diphenyl Ethers (PBDE)
Housing	O	O	O	O	O	O
Display	O	O	O	O	O	O
Printed Circuit Board	O	O	O	O	O	O
Metal Fasteners	O	O	O	O	O	O
Cable Assembly	O	O	O	O	O	O
Fan Assembly	O	O	O	O	O	O
Power Supply Assemblies	O	O	O	O	O	O
Battery	O	O	O	O	O	O

O: This toxic or hazardous substance is contained in all of the homogeneous materials for the part is below the limit requirement in SJ/T11363-2006 (now replaced by GB/T 26572-2011).

X: This toxic or hazardous substance is contained in at least one of the homogeneous materials for this part is above the limit requirement in SJ/T11363-2006 (now replaced by GB/T 26572-2011).

此附件旨在确保本产品符合中国 RoHS 标准。以下表格标示此产品中某有毒物质的含量符合中国 RoHS 标准规定的限量要求。

本产品上会附有"环境友好使用期限"的标签，此期限是估算这些物质"不会有泄漏或突变"的年限。本产品可能包含有较短的环境友好使用期限的可替换元件，像是电池或灯管，这些元件将会单独标示出来。

部件名称	有毒有害物质或元素					
	铅 (Pb)	汞 (Hg)	镉 (Cd)	六价铬 (CR(VI))	多溴联苯 (PBB)	多溴二苯醚 (PBDE)
壳体	O	O	O	O	O	O
显示	O	O	O	O	O	O
印刷电路板	O	O	O	O	O	O
金属螺帽	O	O	O	O	O	O
电缆组装	O	O	O	O	O	O
风扇组装	O	O	O	O	O	O
电力供应组装	O	O	O	O	O	O
电池	O	O	O	O	O	O

O: 表示该有毒有害物质在该部件所有物质材料中的含量均在 SJ/T 11363-2006 (现由 GB/T 26572-2011 取代) 标准规定的限量要求以下。

X: 表示该有毒有害物质至少在该部件的某一均质材料中的含量超出 SJ/T 11363-2006 (现由 GB/T 26572-2011 取代) 标准规定的限量要求。