IEI Integration Corp.

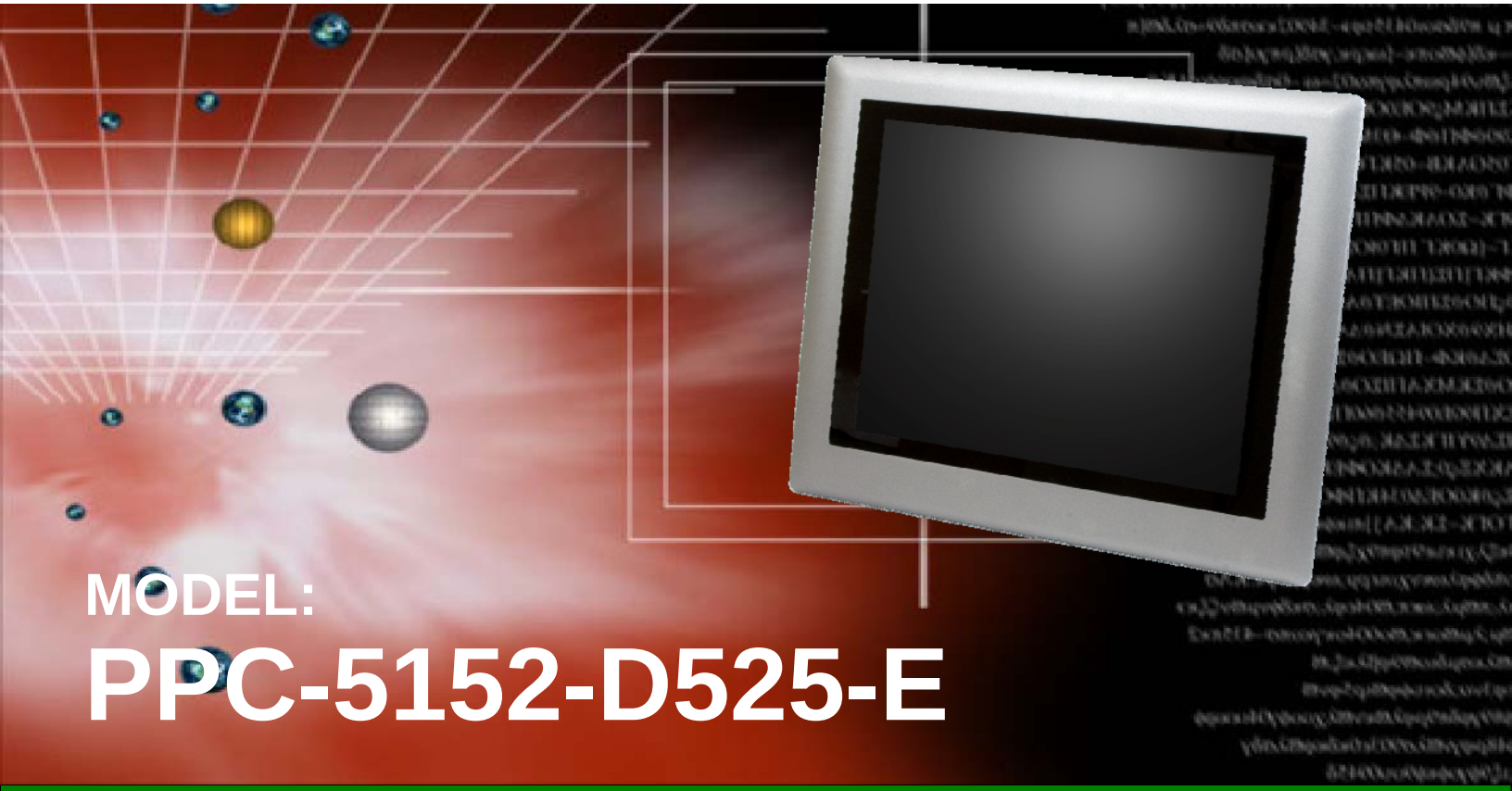

MODEL:

PPC-5152-D525-E

15” Panel PC with Touchscreen, Intel® Atom™ CPU, USB 3.0, Dual Gigabit LAN, RS-232/422/485, IP 64 Protection, RoHS Compliant

User Manual

Rev. 1.10 – October 14, 2014

RoHS Lead Free

Revision

Date	Version	Changes
October 14, 2014	1.10	Initial release

Copyright

COPYRIGHT NOTICE

TRADEMARKS

WARNING

This device complies with Part 15 of the FCC Rules. Operation is subject to the following two conditions:
(1) this device may not cause harmful interference, and(2) this device must accept any interference received, including interference that may cause undesired operation.

NOTE: This equipment has been tested and found to comply with the limits for a Class B digital device, pursuant to part 15 of the FCC Rules. These limits are designed to provide reasonable protection against harmful interference in a residential installation. This equipment generates, uses and can radiate radio frequency energy and, if not installed and used in accordance with the instructions, may cause harmful interference to radio communications.
However, there is no guarantee that interference will not occur in a particular installation. If this equipment does cause harmful interference to radio or television reception, which can be determined by turning the equipment off and on, the user is encouraged to try to correct the interference by one or more of the following measures:
—Reorient or relocate the receiving antenna.
—Increase the separation between the equipment and receiver.
—Connect the equipment into an outlet on a circuit different from that to which the receiver is connected.
—Consult the dealer or an experienced radio/ TV technician for help.

You are cautioned that any change or modifications to the equipment not expressly approve by the party responsible for compliance could void your authority to operate such equipment.

IMPORTANT NOTE:

FCC Radiation Exposure Statement:
This equipment complies with FCC radiation exposure limits set forth for an uncontrolled environment. This equipment should be installed and operated with minimum distance 20cm between the radiator & your body.

Table of Contents

List of Figures

List of Tables

Chapter

1

Introduction

1.1 Overview

Figure 1-1: PPC-5152-D525-E Panel PC

The fanless PPC-5152-D525-E is Intel® Atom™ D525 powered flat-bezel panel PC with a rich variety of functions and peripherals. The PPC-5152-D525-E panel PC is designed for easy and simplified integration in to various applications.

An Intel® ICH8M chipset ensures optimal memory, graphics, and peripheral I/O support. The system comes with 1GB of preinstalled DDR3 SDRAM ensuring smooth data throughputs with reduced bottlenecks and fast system access.

Five serial ports and four USB ports ensure simplified connectivity to a variety of external peripheral devices. A VGA connector enables connectivity to other monitors. Dual gigabit LAN connectors ensure smooth connection of the system to an external LAN.

1.2 Features

All the PPC-5152-D525-E models feature the following:

- 15" 400nits 1024 x 768 LCD with LED backlight
- 5-wire resistive type touchscreen
- Fanless system with 1.8GHz Intel® Atom™ D525 dual-core processor
- Dual gigabit Ethernet port
- Flexible expansion interfaces:
  - Two PCI slots or
  - One PCI slot and one PCIe x1 slot
- Four USB ports:
  - 2 x USB 2.0 (I/O panel)
  - 2 x USB 3.0 (I/O panel)
- Five serial ports:
  - 2 x RS-232 (DB-9)
  - 2 x RS-422/485 (RJ-45)
  - 1 x RS-232/422/485 (DB-9)
- IP 64 compliant system
- AT or ATX power mode
- RoHS compliance

1.3 External Overview

The flat panel PC is a rectangular cubic structure that comprises of a screen, rear panel, top panel, bottom panel and two side panels (left and right). An aluminum frame surrounds the front screen. The rear panel provides screw holes for a wall-mounting bracket, and an arm mounting interface. The bottom panel provides access to external interface connectors.

1.3.1 Front Panel

The front side of the PPC-5152-D525-E is a flat panel TFT LCD screen surrounded by an aluminum frame.

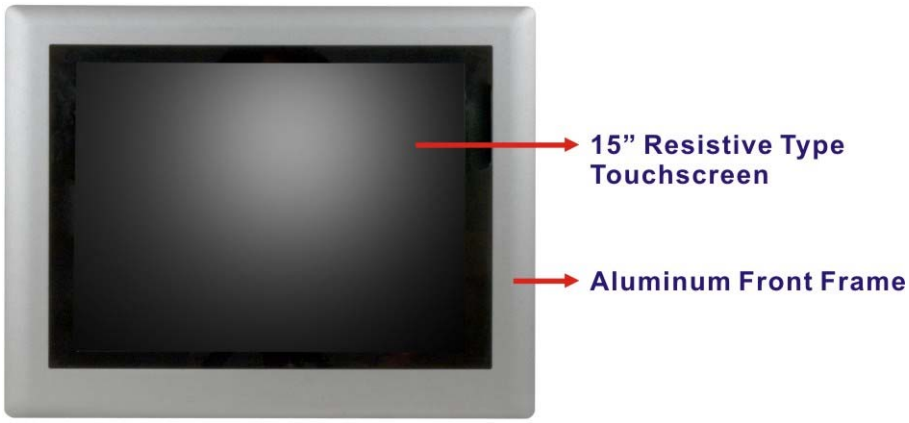

Figure 1-2: Front View

1.3.2 Bottom Panel

The following is a list of the bottom panel peripheral device connectors on the PPC-5152-D525-E.

- 1 x 9 V ~ 36 V DC power input connector
- 2 x RJ-45 GbE connector
- 2 x RS-232 serial port connector (COM1, COM2)
- 1 x RS-232/422/485 serial port (COM3) connector
- 2 x RS-422/485 COM ports by RJ-45 connectors (COM4, COM5)
- 2 x USB 2.0 connectors
- 2 x USB 3.0 connectors
- 1 x VGA connector

- 1 x CF Type II slot
- 2 x Expansion slots for PCI/PCIe expansion modules

The bottom panel also includes the following switches and buttons:

- 1 x Power switch
- 1 x AT/ATX power mode switch
- 1 x Reset button

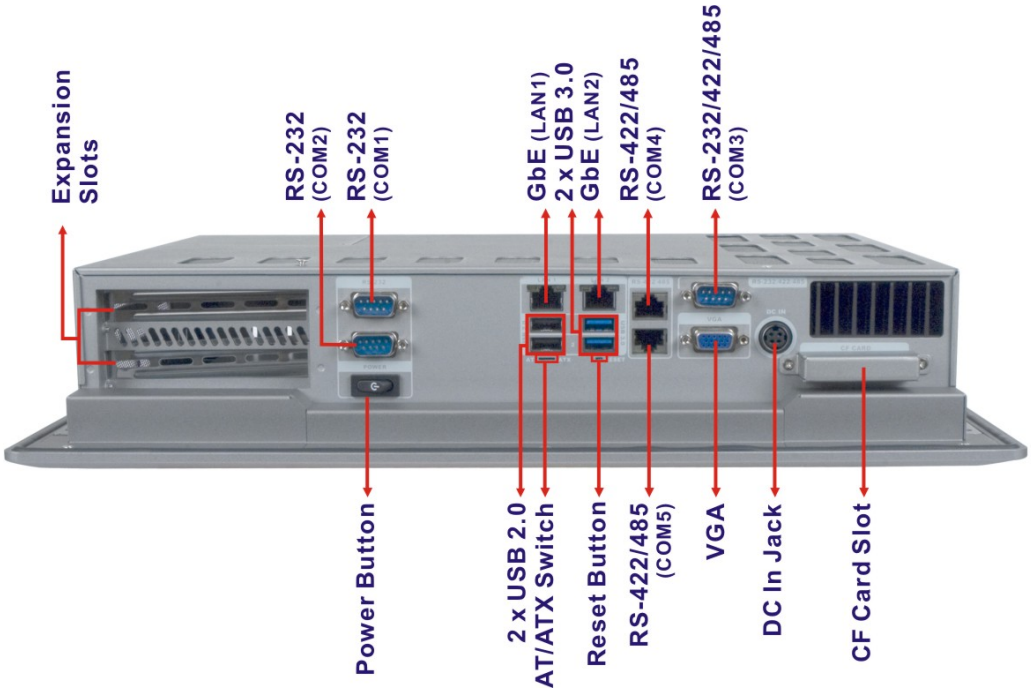

Figure 1-3: Bottom View

1.3.3 Side Panels

Both side panels of the flat panel PC have some vents for ventilation and slots for installing the panel mounting clamps (**Figure 1-4**).

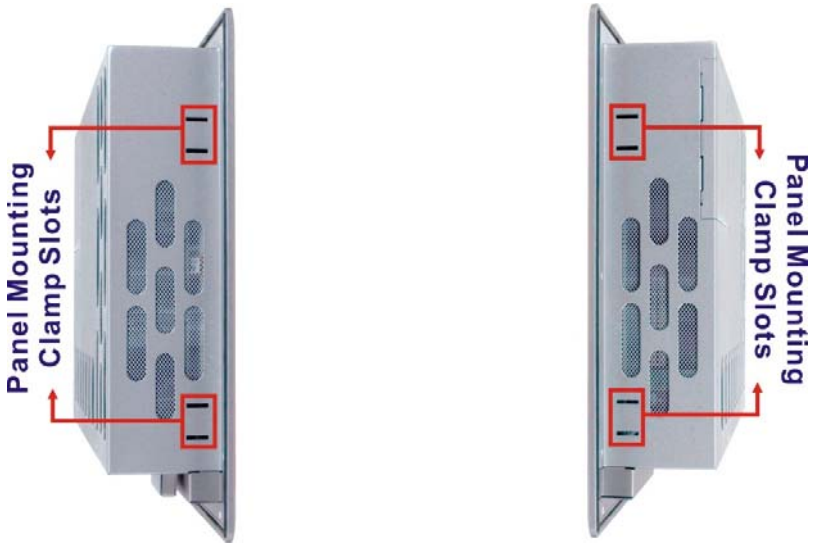

Figure 1-4: Side View

1.3.4 Top Panel

The top panel of the flat panel PC has some vents for ventilation and slots for installing the panel mounting clamps (**Figure 1-4**).

Figure 1-5: Top View

1.3.5 Rear Panel

The rear panel has retention screw holes that support VESA-mounting compliant wall-mounting brackets, stands or arms.

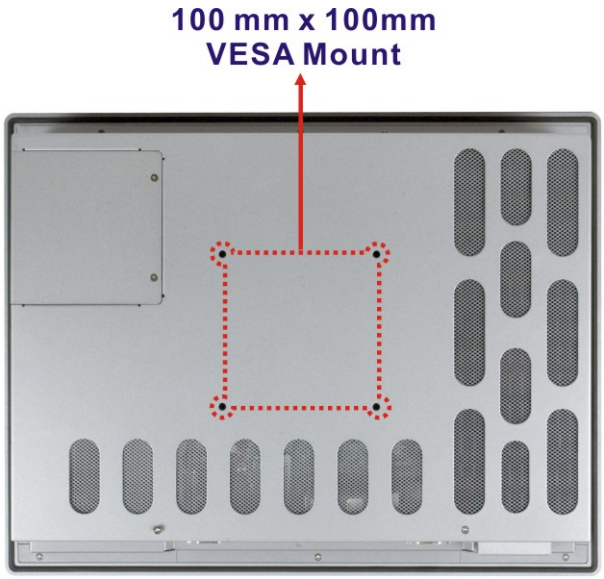

Figure 1-6: Rear View

1.4 Backplane Options

The backplane option of the PPC-5152-D525-E is shown below.

Figure 1-7: Backplane Option (HPE-2S2)

The rated voltage and current of the backplane are listed below:

Rated Voltage	Rated Current
+5 V	5 A
+12 V	2.4 A
-12 V	0.1 A
+3.3 V	8 A

WARNING:

The system default power is 90 W. The maximum total power of the backplane to support expansion cards is 35 W. The power of the selected expansion cards can not exceed the maximum power (35 W), otherwise, the system may fail.

1.5 Dimensions

The dimensions of the PPC-5152-D525-E are shown in **Figure 1-8** and listed below.

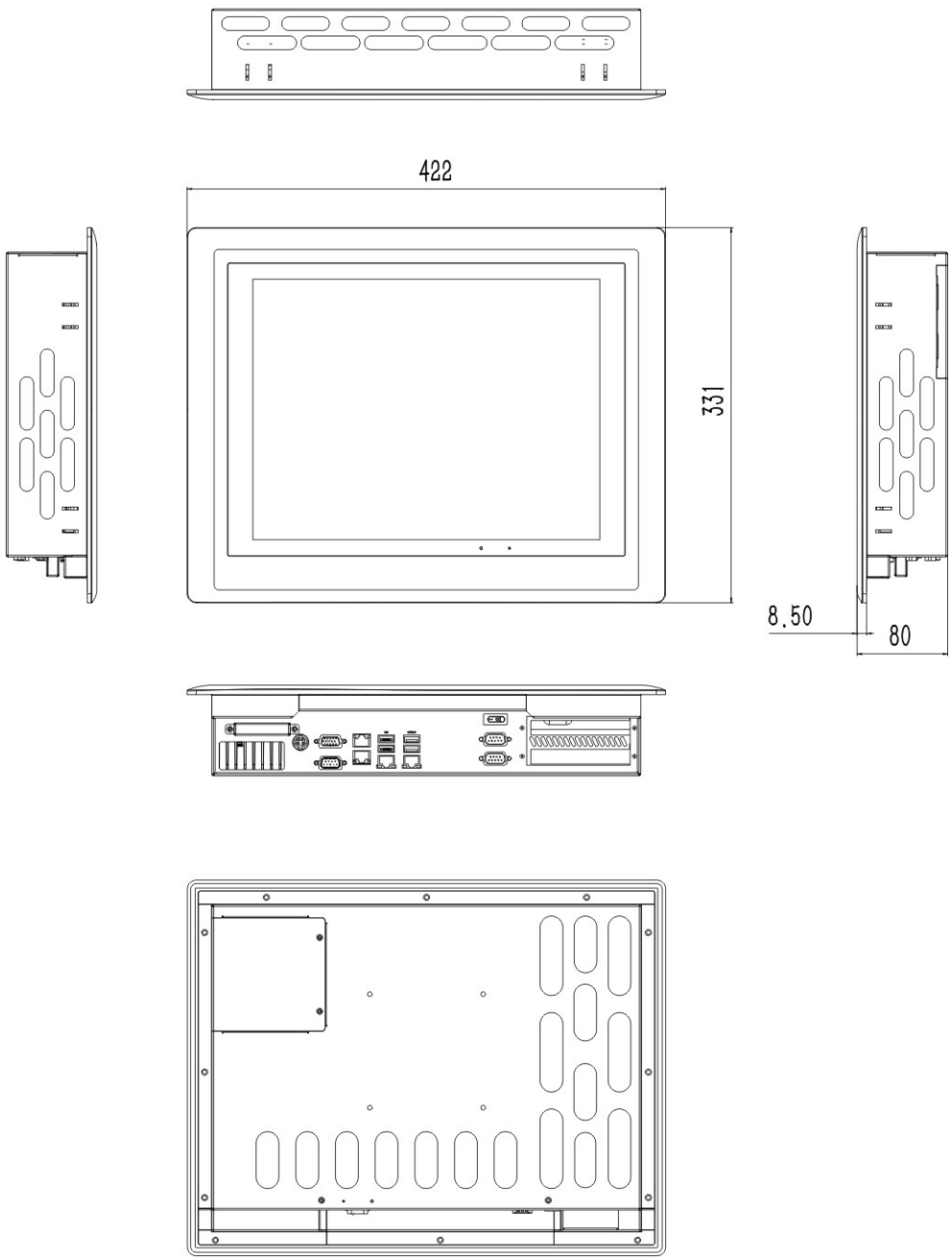

Figure 1-8: PPC-5152-D525-E Dimensions (mm)

1.6 Specifications

The technical specifications for the PPC-5152-D525-E system are listed in **Table 1-1**.

Specification	PPC-5152-D525-E
LCD Size	15”
Max. Resolution	1024 x 768 (XGA)
Brightness	400 cd/m^2
Contrast Ratio	500:1
LCD Color	16.2 M
Pixel Pitch (mm)	0.1095 (H) x 0.1095 (V)
Viewing Angle (H-V)	160 (H) / 140 (V)
Backlight MTBF	50,000 hours
SBC Model	PPCMB-5152A-D525
CPU	1.8 GHz Intel® Atom™ D525 dual-core processor
Chipsets	Intel® ICH8M
Memory	On-board 1.0 GB DDR3 SDRAM SO-DIMM (system max. 4 GB)
Ethernet	Realtek RTL8111E PCIe GbE controller supports ASF 2.0
Drive Bay	One 2.5” SATA HDD/SSD bay
CompactFlash®	One CF Type II socket
Watchdog Timer	Software Programmable supports 1 sec. ~ 255 sec. system reset
Ethernet	Two Gigabit LAN ports

Expansion	Two PCI slots or One PCI slot and one PCIe x1 slot
Construction Material	Aluminum (front panel) Heavy-duty steel (chassis)
Mounting	Wall, Panel, Rack, Stand, Arm (VESA 100 mm x 100 mm)
Front Panel Color	PMS 8401C
Dimensions (W x H x D)	422 mm x 331 mm x 80 mm
Cut-out Dimensions (W x H)	390 mm x 290 mm
Weight (Net/Gross)	6.5kg/7.0kg
Operating Temperature	-20ºC ~ 50ºC
Storage Temperature	-30ºC ~ 80ºC
Relative Humidity	5%~90%, non-condensing
IP Level	IP 64 compliant front panel
Touchscreen	5-wire resistive type
Vibration	MIL-STD-810F 514.5C-2 (with CF card or SSD)
Shock	Half-sine wave shock 3G; 11ms; 3 shocks per axis
Power Adapter	FSP 90W power adapter (FSP090-D2BA1)
	Input: 100 VAC ~ 240 VAC @ 50 Hz / 60 Hz
	Output: 19 VDC
Power Requirement	DC input: 9 V ~ 36 V
Power Consumption	50 W (without add-on card)
I/O Ports and Switches	1 x 9 V ~ 36 V DC In jack

	Five serial ports : 2 x DB-9 RS-232 ports 1 x DB-9 RS-232/422/485 port 2 x RJ-45 RS-422/485 ports
	Four USB ports: 2 x USB 2.0 (I/O panel) 2 x USB 3.0 (I/O panel)
	1 x VGA connector
	1 x AT/ATX power mode switch
	1 x Power switch
	1 x Reset button

Table 1-1: System Specifications

1.7 Power Adapter Specifications

The specifications of the power adapter that came with the PPC-5152-D525-E are listed in **Table 1-2**.

Model Name	FSP090-D2BA1	
Wattage	90 W	
Product Highlight	V-Output	19 V
	O/P Current	4.74 A
Input Electrical	Input Voltage	90 V ~ 264 V
	Input Frequency	47 Hz ~ 63 Hz
Output Electrical	Single Output	19 V / 4.74 A
No load and Efficiency	No Load	< 0.3 Watts
	Efficiency	≧86 %
	DOE Level	V
Environmental Requirement	Temperature Range	Operating: 0 ℃ to + 40 ℃
		Storage : -30 ℃ to + 60 ℃
	Altitude	2000 M
	MTBF	50,000 hours of continuous operation at 25℃, maximum-output load, and nominal AC input voltage
Mechanical	129 mm x 51 mm x 30.9 mm	
Protection	Over Voltage Protection, Over Current Protection, Over Temperature Protection	
Safety	CE, UL/cUL, FCC	

Table 1-2: Power Adapter Specifications

Chapter

2

Unpacking

2.1 Unpacking

To unpack the flat panel PC, follow the steps below:

WARNING!

The front side LCD screen has a protective plastic cover stuck to the screen. Only remove the plastic cover after the panel PC has been properly installed. This ensures the screen is protected during the installation process.

Step 1: Use box cutters, a knife or a sharp pair of scissors that seals the top side of the external (second) box.

Step 2: Open the external (second) box.

Step 3: Use box cutters, a knife or a sharp pair of scissors that seals the top side of the internal (first) box.

Step 4: Lift the monitor out of the boxes.

Step 5: Remove both polystyrene ends, one from each side.

Step 6: Pull the plastic cover off the panel PC.

Step 7: Make sure all the components listed in the packing list are present.

2.2 Packing List

The PPC-5152-D525-E panel PC is shipped with the following components:

Quantity	Item	Image
1	PPC-5152-D525-E panel PC	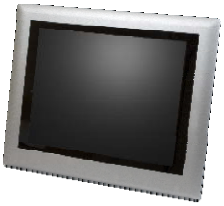
1	Power adapter (**P/N**: 63040-010090-050-RS)	
1	Power cord (**P/N**: 32702-000401-100-RS)	
2	RJ-45 to DB-9 COM port cable (**P/N**: 32005-000700-101-RS)	
4	HDD installation screws (M3*4) (**P/N**: 44043-030051-RS)	
4	VESA mount screws (M4*6) (**P/N**: 44033-040062-RS)	
4	Backup chassis screws (M3*4) (**P/N**: 44013-030041-RS)	
6	Panel mounting clamps (**P/N**: 19Z00-000024-01-RS)	
1	Touch pen (**P/N**: 43125-0002C0-00-RS)	

1	User manual CD and driver CD (**P/N**: IEI-7B000-000732-RS)	
1	One Key Recover CD (**P/N**: IEI-7B000-000724-RS)	

If any of these items are missing or damaged, contact the distributor or sales representative immediately.

Chapter

3

Installation

3.1 Anti-static Precautions

WARNING:

Failure to take ESD precautions during the maintenance of the EP series may result in permanent damage to the EP series and severe injury to the user.

Electrostatic discharge (ESD) can cause serious damage to electronic components, including the PPC-5152-D525-E. Dry climates are especially susceptible to ESD. It is therefore critical that whenever the PPC-5152-D525-E is accessed internally, or any other electrical component is handled, the following anti-static precautions are strictly adhered to.

- ***Wear an anti-static wristband***: - Wearing a simple anti-static wristband can help to prevent ESD from damaging the board.
- ***Self-grounding***: - Before handling the board touch any grounded conducting material. During the time the board is handled, frequently touch any conducting materials that are connected to the ground.
- ***Use an anti-static pad***: - When configuring the PPC-5152-D525-E, place it on an anti-static pad. This reduces the possibility of ESD damaging the PPC-5152-D525-E.
- ***Only handle the edges of the PCB***: - When handling the PCB, hold the PCB by the edges.

3.2 Installation Precautions

When installing the panel PC, please follow the precautions listed below:

- **Power turned off**: When installing the panel PC, make sure the power is off. Failing to turn off the power may cause severe injury to the body and/or damage to the system.
- **Certified Engineers**: Only certified engineers should install and modify onboard functionalities.
- **Anti-static Discharge**: If a user open the rear panel of the panel PC, to

configure the jumpers or plug in added peripheral devices, ground themselves first and wear and anti-static wristband.

3.3 Preinstalled Components

The following components are all preinstalled.

- Motherboard
- TFT LCD screen
- DDR3 memory module
- Resistive type touchscreen
- PCI riser card

3.4 CompactFlash® Installation

To install the CompactFlash® card, please follow the steps below:

Step 1: Undo the CompactFlash® slot cover screw and remove the CompactFlash® slot cover.

Figure 3-1: CompactFlash® Cover Screws

Step 2: Insert the CompactFlash® card into the slot.

Figure 3-2: CompactFlash® Slot

Step 3: Fasten the CompactFlash® cover plate.

3.5 HDD Installation

The PPC-5152-D525-E has one internal HDD bay. To install the HDD, follow the instructions below.

Step 1: Remove a total of 11 retention screws from the back cover, nine on the rear of the frame and two on the rear panel (**Figure 3-3**).

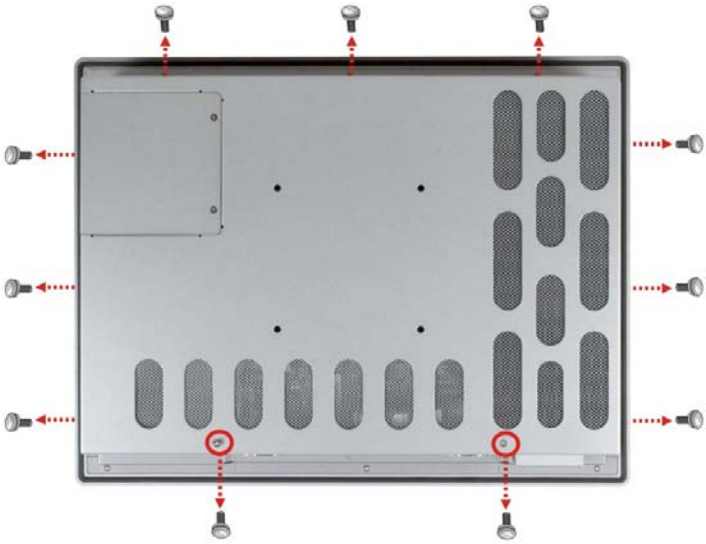

Figure 3-3: Rear Panel Retention Screws

Step 2: Remove the four HDD bracket retention screws and unplug the SATA cable and the SATA power cable from the motherboard. See **Figure 3-4**.

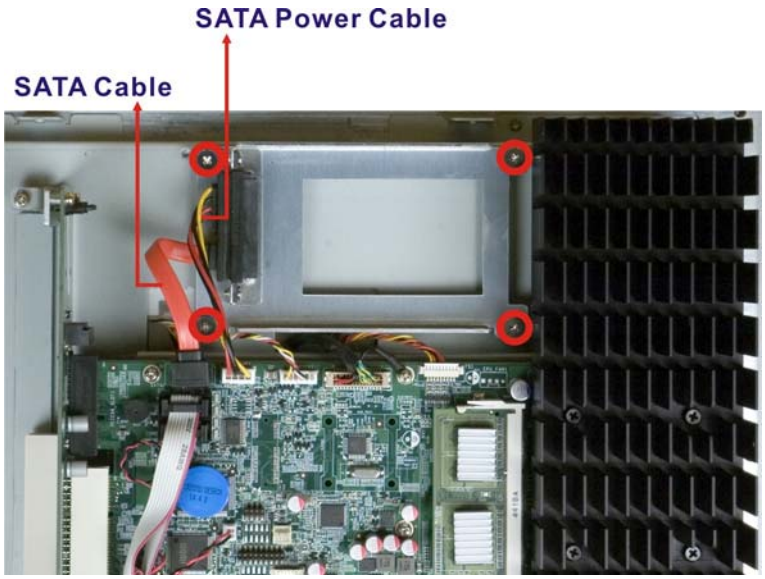

Figure 3-4: HDD Bracket Retention Screws

Step 3: Lift the HDD bracket out of the PPC-5152-D525-E.

Step 4: Insert the HDD to the bracket and connect the HDD to the SATA connector on the bracket.

Step 5: Secure the HDD with the HDD bracket by four retention screws (**Figure 3-5**).

Figure 3-5: HDD Installation

Step 6: Secure the HDD bracket with the PPC-5152-D525-E by the four retention screws that were previously removed (**Figure 3-6**).

Figure 3-6: HDD Bracket Installation

Step 7: Connect the SATA cable and the SATA power cable to the corresponding connectors on the motherboard.

Step 8: Reinstall the rear panel to the PPC-5152-D525-E.

3.6 PCI Expansion Card Installation

CAUTION:

The maximum dimensions of the expansion card should be 200 mm in length, 100 mm in width and 20 mm in height. The width of the I/O panel should be no more than 73.8 mm. The diagram below shows the dimensions of the expansion slot on the bottom panel of the PPC-5152-D525-E.

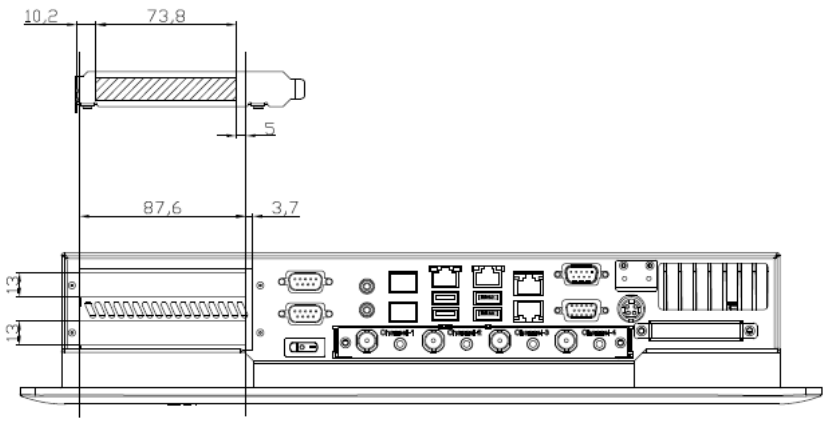

To install a PCI expansion card, please do the following.

Step 1: Remove the rear cover. See **Section 3.5 Step 1**.

Step 2: Remove the expansion slot cover. The expansion slot cover is secured to the system with a single retention screw. Remove the screw and the cover.

Figure 3-7: PCI Expansion Slot Retention Screw

Step 3: Insert the expansion card. Align the PCI expansion card edge connector with the PCI expansion slot on the PCI riser card. Gently insert the PCI card into the PCI expansion slot.

Step 4: Secure the expansion card. Once the PCI card is correctly installed in the system, reinsert the previously removed retention screw to secure the card to the I/O interface panel.

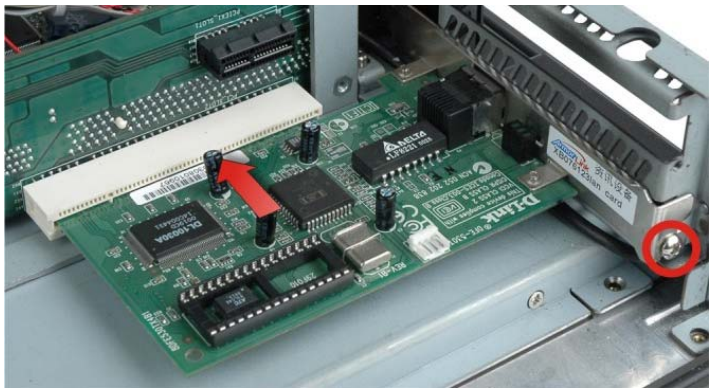

Figure 3-8: Install PCI Card

3.7 PCIe Expansion Card Installation (Optional)

CAUTION:

The maximum dimensions of the expansion card should be 200 mm in length, 100 mm in width and 20 mm in height. The width of the I/O panel should be no more than 73.8 mm. The diagram below shows the dimensions of the expansion slot on the bottom panel of the PPC-5152-D525-E.

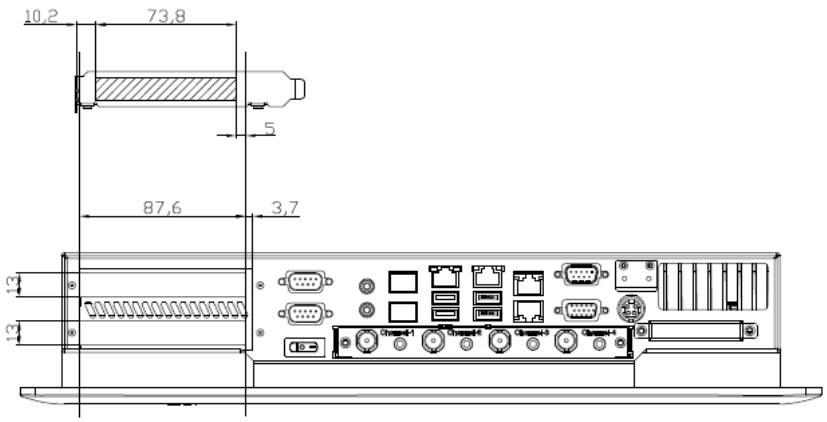

To install a PCIe expansion card, please do the following.

Step 1: Remove the rear cover. See **Section 3.5 Step 1**.

Step 2: Remove the expansion slot cover. The expansion slot cover is secured to the system with a single retention screw. Remove the screw and the cover.

Figure 3-9: PICe Expansion Slot Retention Screw

Step 3: Insert the expansion card. Align the PCIe expansion card edge connector with the PCIe expansion slot on the PCIe riser card. Gently insert the PCIe card into the PCIe expansion slot.

Step 4: Secure the expansion card. Once the PCIe card is correctly installed in the system, reinsert the previously removed retention screw to secure the card to the I/O interface panel.

Figure 3-10: Install PCIe Card

3.8 Mounting the System

WARNING:

When mounting the flat panel PC onto an arm or onto the wall, it is better to have more than one person to help with the installation to make sure the flat panel PC does not fall down and get damaged.

The following installation options are available:

- Arm mounting
- Panel mounting
- Rack/Cabinet mounting
- Stand mounting
- Wall mounting

The mounting methods are described below.

3.8.1 Arm Mounting

The PPC-5152-D525-E can be installed on any arm that supports the standard VESA mounting interface. An example arm is shown below.

Figure 3-11: VESA Compliant Arm

To install the PPC-5152-D525-E on the arm, follow the directions below.

NOTE:

Make sure the arm supports standard VESA mounting. The PPC-5152-D525-E uses a VESA mounting to attach to the arm.

Step 1: The arm is purchased separately. Follow the instructions in the arm's user manual to securely attach the arm to the wall.

Step 2: Once the mounting arm has been firmly attached to the surface, lift the panel PC onto the interface pad of the mounting arm.

Step 3: Align the retention screw holes on the mounting arm interface with those in the panel PC. The arm mount retention screw holes are shown in **Figure 3-12**.

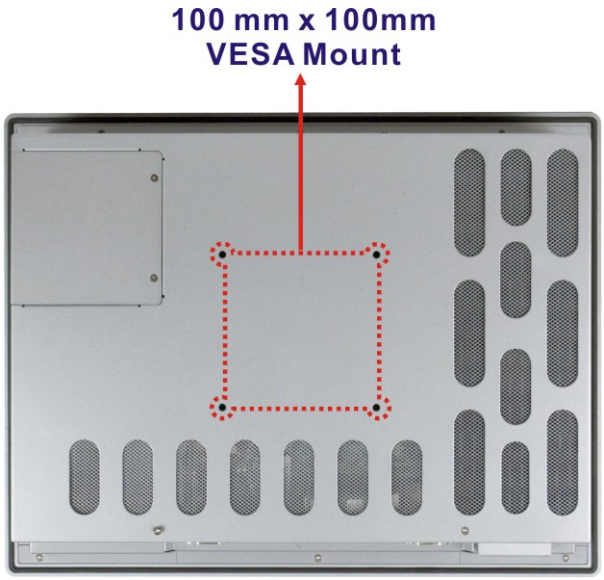

Figure 3-12: Arm Mounting Retention Screw Holes

Step 4: Secure the flat panel PC to the interface pad by inserting four retention screws through the bottom of the mounting arm interface pad and into the flat panel PC.

3.8.2 Panel Mounting

To mount the PPC-5152-D525-E flat panel PC into a panel, please follow the steps below.

Step 1: Select the position in the panel to mount the panel PC.

Step 2: Cut out a section from the panel that corresponds to the dimensions of the flat panel PC chassis. The panel section that is cut out must be smaller than the size of the aluminum frame that surrounds the TFT LCD panel but just large enough for the chassis to fit through. Refer to **Figure 3-13** for the suggested cut out size.

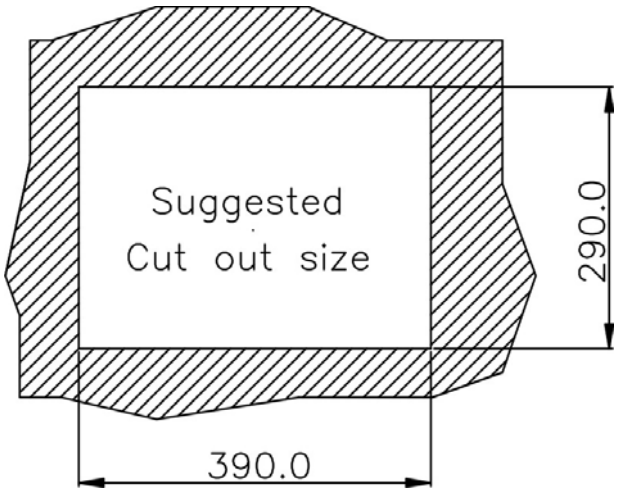

Figure 3-13: Suggested Panel Cut Out Size for PPC-5152-D525-E (Unit: mm)

Step 3: Slide the flat panel computer through the previously cut hole. The chassis at the rear of the flat panel should slide easily through the hole. Only stop sliding the panel through the hole when the back of the front aluminum frame is flush against the panel.

Step 4: Insert the panel mounting clamps into the pre-formed holes along the edges of the chassis, behind the frame. There are a total of 6 panel mounting clamps for PPC-5152-D525-E.

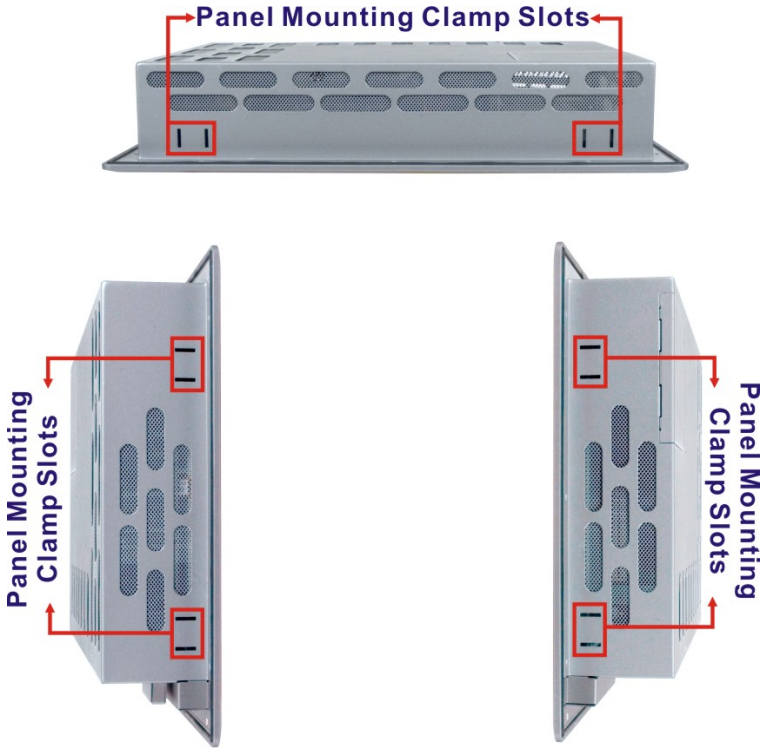

Figure 3-14: Panel Mounting Clamp Slots (Side View)

Step 5: Tighten the screws that pass through the panel mounting clamps until the plastic caps at the front of all the screws are firmly secured to the panel (**Figure 3-15**).

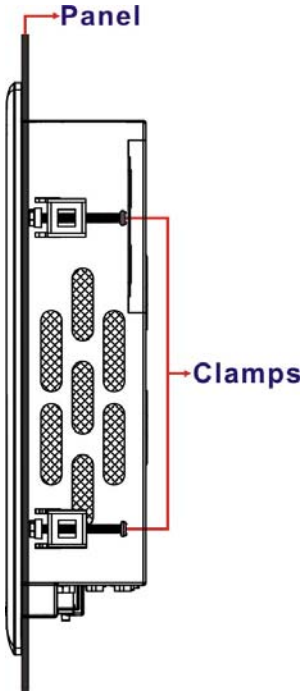

Figure 3-15: Tighten the Panel Mounting Clamp Screws

3.8.3 Rack/Cabinet Mounting

The PPC-5152-D525-E panel PC can be installed into a rack or cabinet. The installation procedures are similar to the panel mounting installation. To do this, please follow the steps below:

NOTE:

When purchasing the cabinet/rack installation bracket, make sure it is compatible with both the PPC-5152-D525-E flat panel PC and the rack/cabinet into which the PPC-5152-D525-E is installed.

Step 1: Slide the rear of the PPC-5152-D525-E panel PC through the rack/cabinet bracket until the aluminum frame is flush against the front of the bracket (**Figure 3-16**).

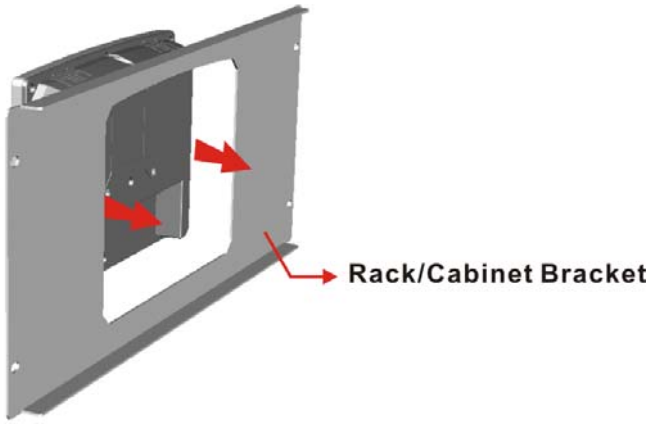

Figure 3-16: The Rack/Cabinet Bracket

Step 2: Insert the rack mounting clamps into the pre-formed holes along the edges of the panel PC, behind the ABS/PC plastic frame.

Step 3: Tighten the screws that pass through the rack mounting clamps until the plastic caps at the front of all the screws are firmly secured to the bracket (**Figure 3-17**).

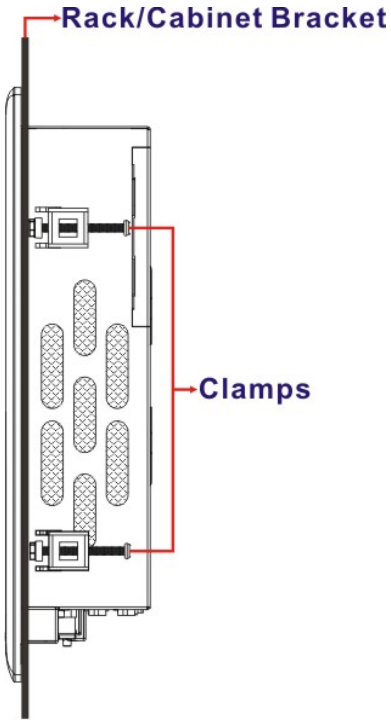

Figure 3-17: Secure the Rack/Cabinet Bracket

Step 4: Slide the panel PC with the attached rack/cabinet bracket into a rack or cabinet (**Figure 3-18**).

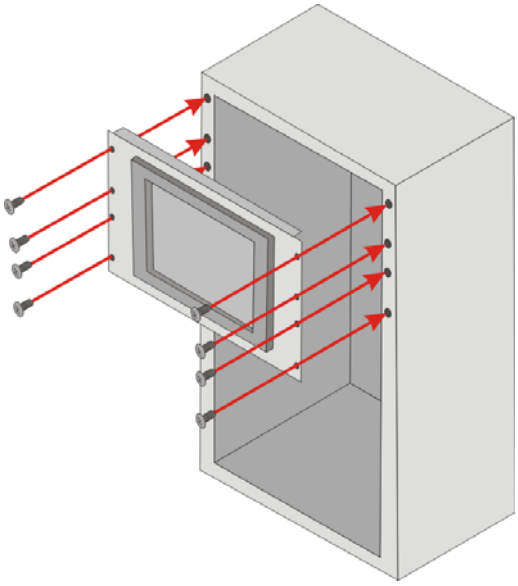

Figure 3-18: Install into a Rack/Cabinet

Step 5: Once the panel PC with the attached rack/cabinet bracket has been properly inserted into the rack or cabinet, secure the front of the rack/cabinet bracket to the front of the rack or cabinet (**Figure 3-18**).

3.8.4 Stand Mounting

The PPC-5152-D525-E can be installed on any stand that supports the standard VESA mounting interface. An example stand is shown below.

Figure 3-19: VESA Compliant Stand

To install the PPC-5152-D525-E on the stand, follow the directions below.

Step 1: Locate the screw holes on the rear of the PPC-5152-D525-E. This is where the stand bracket will be attached. The stand mount retention screw holes are shown in **Figure 3-20**.

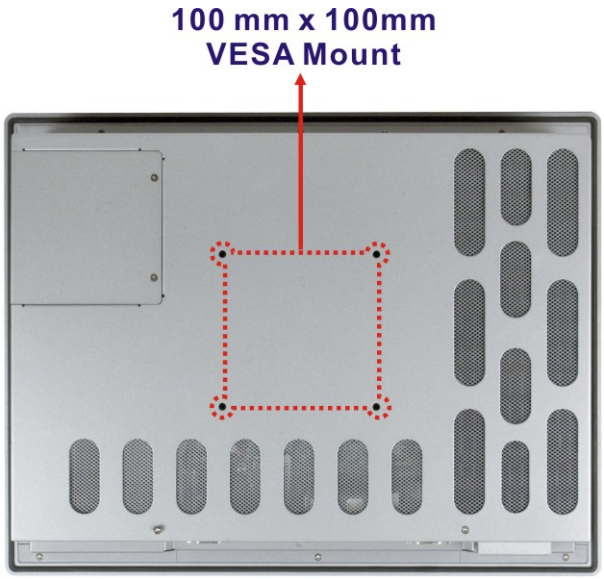

Figure 3-20: Stand Mounting Retention Screw Holes

Step 2: Align the bracket with the screw holes.

Step 3: Insert the retention screws into the screw holes to secure the bracket to the PPC-5152-D525-E.

3.8.5 Wall Mounting

To mount the panel PC onto the wall, please follow the steps below.

Step 1: Select the location on the wall for the wall-mounting bracket.

Step 2: Carefully mark the locations of the four brackets screw holes on the wall.

Step 3: Drill four pilot holes at the marked locations on the wall for the bracket retention screws.

Step 4: Align the wall-mounting bracket screw holes with the pilot holes.

Step 5: Secure the mounting-bracket to the wall by inserting the retention screws into the four pilot holes and tightening them (Figure 3-21).

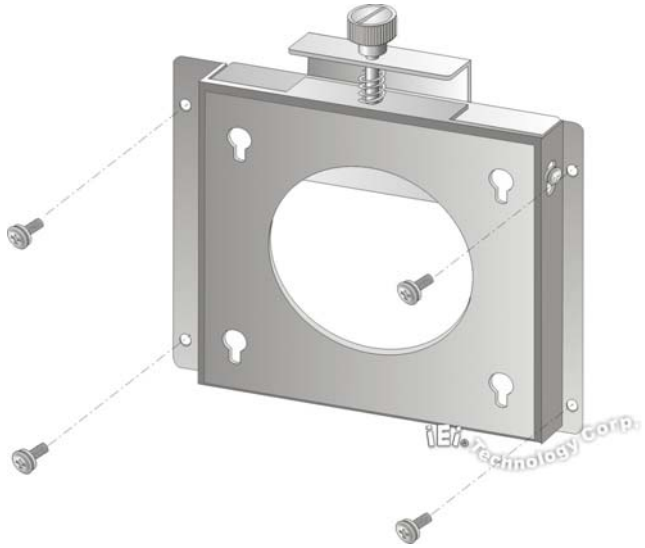

Figure 3-21: Wall-mounting Bracket

Step 6: Insert the four monitor mounting screws provided in the wall mounting kit into the four screw holes on the real panel of the flat panel PC and tighten until the screw shank is secured against the rear panel (Figure 3-22).

Step 7: Align the mounting screws on the monitor rear panel with the mounting holes on the bracket.

Step 8: Carefully insert the screws through the holes and gently pull the monitor downwards until the monitor rests securely in the slotted holes (Figure 3-22). Ensure that all four of the mounting screws fit snuggly into their respective slotted holes.

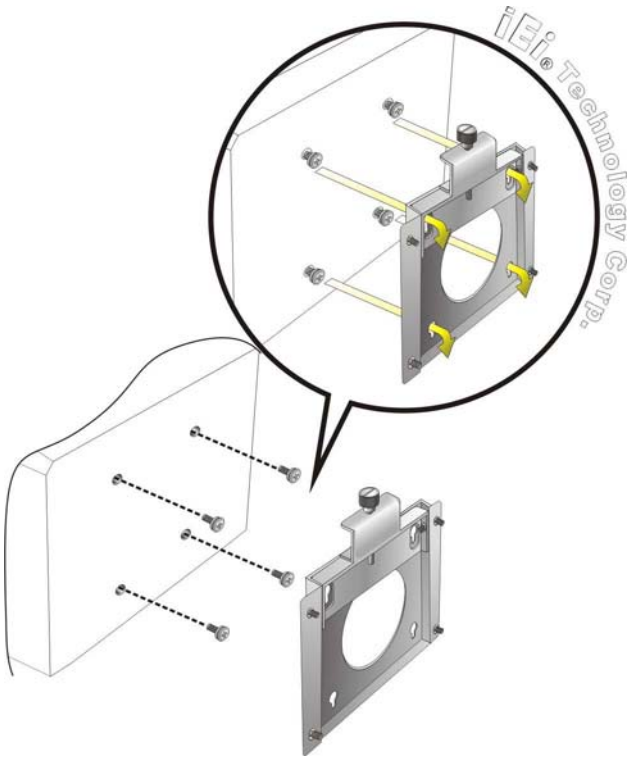

Figure 3-22: Chassis Support Screws

NOTE:

In the diagram below the bracket is already installed on the wall.

Step 9: Secure the panel PC by fastening the retention screw of the wall-mounting bracket. (Figure 3-23).

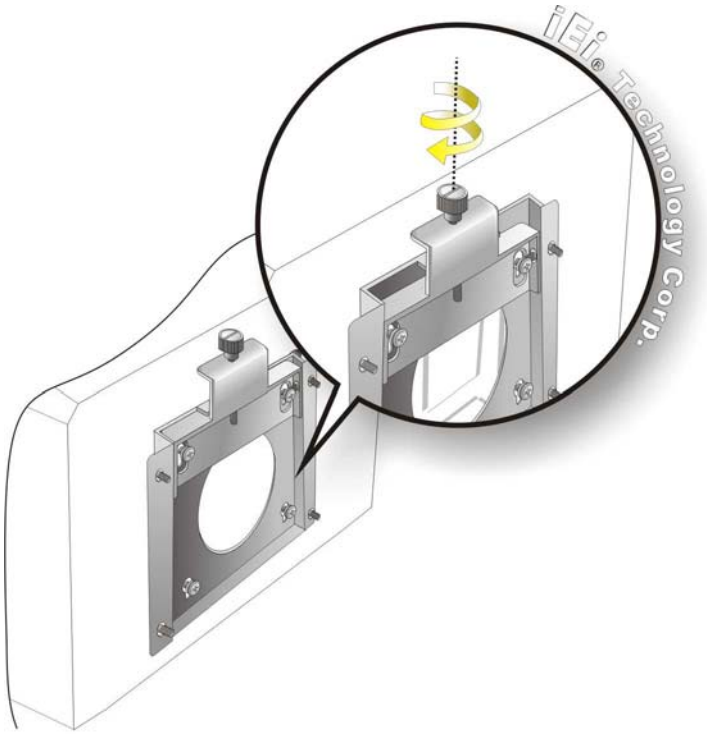

Figure 3-23: Secure the Panel PC

3.9 Bottom Panel Connectors

The bottom panel of the PPC-5152-D525-E contains I/O connectors, switches and a CF card slot. Detailed descriptions of the connectors can be found in the subsections below.

3.9.1 LAN Connector

The LAN connector allows connection to an external network. The pinouts of the RJ-45 LAN connector is shown below.

Pin	Description	Pin	Description
1	MDI0+	2	MDI0-
3	MDI1+	4	MDI1-
5	MDI2+	6	MDI2-
7	MDI3+	8	MDI3-

Table 3-1: LAN Pinouts

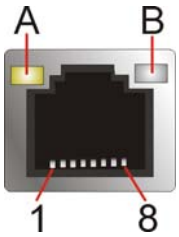

Figure 3-24: RJ-45 Ethernet Connector

The RJ-45 Ethernet connector has two status LEDs, one green and one yellow. See **Figure 3-24**.

LED	Description	LED	Description
A	on: linked blinking: data is being sent/received	B	off: 10 Mb/s green: 100 Mb/s orange: 1000 Mb/s

Table 3-2: RJ-45 Ethernet Connector LEDs

3.9.2 Power Input, DIN Connector

CN Label: **DC IN**

CN Type: 4-pin DIN connector

CN Location: See **Figure 1-3**

The power connector connects to the 9 V ~ 36 V DC power adapter.

3.9.3 RS-232 Serial Port (COM1, COM2)

CN Label: **COM1, COM2**

CN Type: DB-9 connector

CN Location: See **Figure 1-3**

CN Pinouts: See **Table 3-4 and Figure 3-26**

An RS-232 device can be connected to the RS-232 serial port on the bottom panel. The pinouts of the RS-232 serial port is shown below.

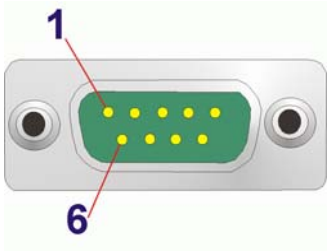

Figure 3-25: RS-232 Serial Port

Pin	Description
1	DCD
2	DSR
3	RX
4	RTS
5	TX
6	CTS
7	DTR
8	RI
9	GND

Table 3-3: RS-232 Serial Port Pinouts

3.9.4 RS-232/422/485 Serial Port (COM3)

CN Label: **COM3**

CN Type: DB-9 connector

CN Location: See **Figure 1-3**

CN Pinouts: See **Table 3-4 and Figure 3-26**

An RS-232/422/485 device can be connected to the RS-232/422/485 serial port on the bottom panel. The pinouts of the RS-232/422/485 serial port is shown below.

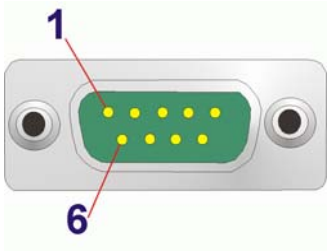

Figure 3-26: RS-232/422/485 Serial Port

Pin	RS-232	RS-422	RS-485
1	DCD	RX+	
2	RXD	RX-	
3	TXD	TX+	DATA+
4	DTR	TX-	DATA-
5	GND		
6	DSR		
7	RTS		
8	CTS		
9	RI		

Table 3-4: RS-232/422/485 Serial Port Pinouts

3.9.4.1 COM3 Mode Select Switch

Jumper Label: **U61**

Jumper Type: 10-pin DIP switch

Jumper Settings: See **Table 3-5**

Jumper Location: See **Figure 3-27**

The COM3 RS-232/422/485 Serial Port Select jumper sets the communication protocol used by the second serial communications port (COM3) as RS-232, RS-422 or RS-485. The COM3 RS-232/422/485 Serial Port Select settings are shown in **Table 3-5**.

COM3 Mode	Settings
RS-232 (Default)	OFF: 1, 2, 3, 4, 5 ON: 6, 7, 8, 9, 10
RS-422/485	OFF: 6, 7, 8, 9, 10 ON: 1, 2, 3, 4, 5

Table 3-5: COM3 RS-232/422/485 Serial Port Select Settings

The COM3 RS-232/422/485 Serial Port Select jumper location is shown in **Figure 3-27**.

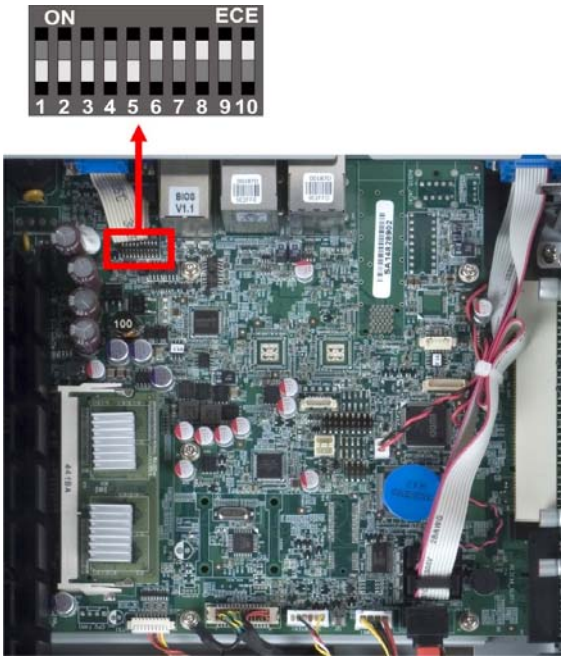

Figure 3-27: COM3 RS-232/422/485 Serial Port Select Switch Location

3.9.5 RJ-45 RS-422/485 Serial Port (COM4, COM5)

CN Label: **COM4, COM5**

CN Type: RJ-45

CN Location: See **Figure 1-3**

CN Pinouts: See **Table 3-6 and Figure 3-28**

An RS-422/485 serial port device can be connected to the RJ-45 RS-422/485 serial port on the bottom panel. The pinouts of the RJ-45 RS-422/485 serial port is shown below.

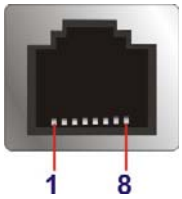

Figure 3-28: RJ-45 RS-422/485 Serial Port

Pin	Description	Pin	Description
1	N/A	5	N/A
2	TXD485#	6	RXD485#
3.	N/A	7	N/A
4.	TXD485+	8	RXD485+

Table 3-6: RJ-45 RS-422/485 Serial Port Pinouts

To install the RS-422/485 devices, follow the steps below.

Step 1: Locate the RJ-45 RS-422/485 connector. The location of the RJ-45 RS-422/485 connector is shown in **Figure 1-3**.

Step 2: Insert the RJ-45 connector. Insert the RJ-45 connector on the RJ-45 to DB-9 COM port cable to the RJ-45 RS-422/485 connector on the PPC-5152-D525-E. See **Figure 3-29**.

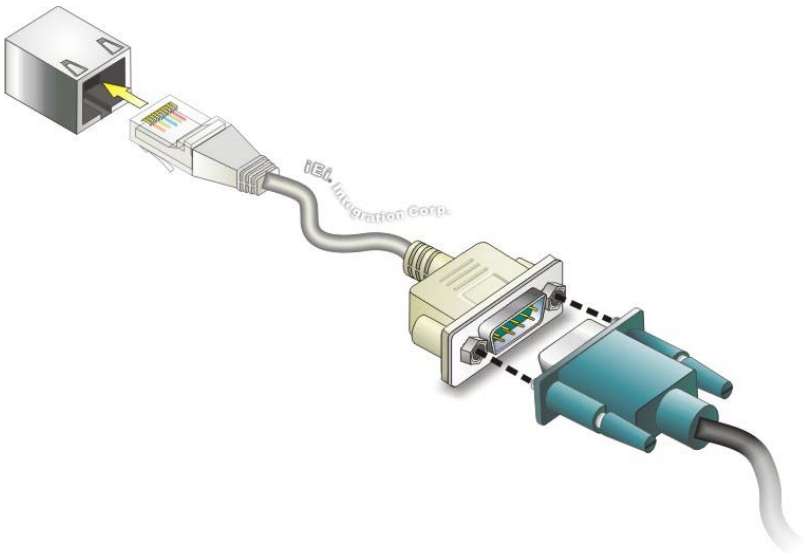

Figure 3-29: RJ-45 RS-422/485 Serial Device Connection

Step 3: Insert the serial connector. Insert the DB-9 connector of a serial device into the DB-9 connector on the RJ-45 to DB-9 COM port cable.

Step 4: Secure the connector. Secure the serial device connector to the external interface by tightening the two retention screws on either side of the connector.

Step 5: The DB-9 connector pinouts are listed below.

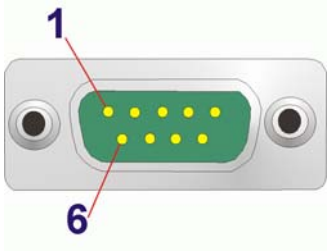

Figure 3-30: RS-422/485 Serial Port (DB-9)

Pin	RS-422	RS-485
1	RX+	--
2	RX-	--
3	TX+	DATA+
4	TX-	DATA-

Pin	RS-422	RS-485
5	--	--
6	--	--
7	--	--
8	--	--
9	--	--

Table 3-7: RS-422/485 Serial Port Pinouts

3.9.6 USB 2.0 Connectors

CN Label: **USB2.0**

CN Type: USB 2.0 port

CN Location: See **Figure 1-3**

CN Pinouts: See **Table 3-8**

The USB 2.0 ports are for attaching USB 2.0 peripheral devices to the system. The pinouts of the USB 2.0 port is shown below.

Pin	Description	Pin	Description
1	VCC	5	VCC
2	DATA-	6	DATA-
3	DATA+	7	DATA+
4	GROUND	8	GROUND

Table 3-8: USB 2.0 Port Pinouts

3.9.7 USB 3.0 Connectors

CN Label: **USB3.0**

CN Type: USB 3.0 port

CN Location: See **Figure 1-3**

CN Pinouts: See **Table 3-8**

The USB 3.0 ports are for attaching USB 3.0 peripheral devices to the system. To be able to use the USB 3.0 ports, please make sure the USB 3.0 function is enabled in BIOS (see **Section 5.3.5**).

The pinouts of the USB 3.0 port is shown below.

Pin	Description	Pin	Description
1	USB_3P0_VCC1	10	USB_3P0_VCC2
2	DATA1-	11	DATA2-
3	DATA1+	12	DATA2+
4	GROUND	13	GROUND
5	RX1N	14	RX2N
6	RX1P	15	RX2P
7	GROUND	16	GROUND
8	TX1N	17	TX2N
9	TX1P	18	TX2P

Table 3-9: USB 3.0 Port Pinouts

3.9.8 VGA Connector

CN Label: **VGA**

CN Type: 15-pin Female

CN Location: See **Figure 1-3**

CN Pinouts: See **Figure 3-31** and **Table 3-10**

The VGA connector connects to a monitor that accepts VGA video input. The pinouts of the VGA connector is shown below.

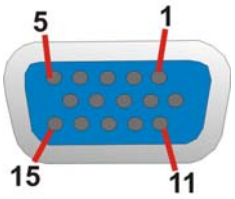

Figure 3-31: VGA Connector

Pin	Description	Pin	Description
1	RED	2	GREEN
3	BLUE	4	NC
5	GND	6	GND
7	GND	8	GND
9	CRT_VCC	10	GND
11	NC	12	5VDDC DAT
13	HSYNC	14	VSYNC
15	5VDDCCLK		

Table 3-10: VGA Connector Pinouts

3.10 Power-up the System

WARNING:

Make sure a power supply with the correct input voltage is being fed into the system. Incorrect voltages applied to the system may cause damage to the internal electronic components and may also cause injury to the user.

3.10.1 AT/ATX Power Mode Selection

The PPC-5152-D525-E supports both AT and ATX power modes. The setting can be made through the AT/ATX power mode switch on the bottom panel as shown below.

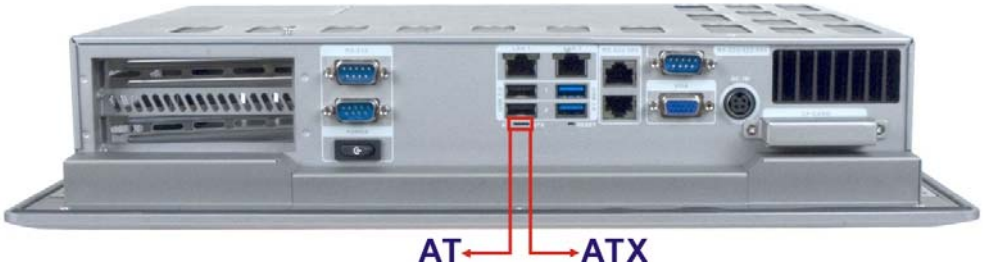

Figure 3-32: AT/ATX Power Mode Switch

3.10.2 Powering On/Off in ATX Power Mode

- **Power on** the system: press the power button for 3 seconds
- **Power off** the system: press the power button for 6 seconds

Figure 3-33: Power Button

Chapter

4

System Maintenance

4.1 System Maintenance Introduction

If the components of the PPC-5152-D525-E fail they must be replaced. Components that can be replaced include:

- SO-DIMM module
- WLAN Module

Please contact the system reseller or vendor to purchase the replacement parts. Back cover removal instructions for the PPC-5152-D525-E are described below.

4.2 Anti-static Precautions

WARNING:

Failure to take ESD precautions during the maintenance of the PPC-5152-D525-E may result in permanent damage to the PPC-5152-D525-E and severe injury to the user.

Electrostatic discharge (ESD) can cause serious damage to electronic components, including the PPC-5152-D525-E. Dry climates are especially susceptible to ESD. It is therefore critical that whenever the PPC-5152-D525-E is accessed internally, or any other electrical component is handled, the following anti-static precautions are strictly adhered to.

- ***Wear an anti-static wristband***: - Wearing a simple anti-static wristband can help to prevent ESD from damaging the board.
- ***Self-grounding***: - Before handling the board touch any grounded conducting material. During the time the board is handled, frequently touch any conducting materials that are connected to the ground.
- ***Use an anti-static pad***: - When configuring the PPC-5152-D525-E, place it on an anti-static pad. This reduces the possibility of ESD damaging the PPC-5152-D525-E.
- ***Only handle the edges of the PCB***: - When handling the PCB, hold the PCB by the edges.

4.3 Turn off the Power

WARNING:

Failing to turn off the system before opening it can cause permanent damage to the system and serious or fatal injury to the user.

Before any maintenance procedures are carried out on the system, make sure the system is turned off.

To power off the system, follow the steps below:

Step 1: Locate the power switch. See **Figure 3-33**.

Step 2: Hold down the power switch for **six** seconds to power off the system.

4.4 Opening the System

To access the PPC-5152-D525-E internally the back cover must be removed. To remove the back cover, please follow the steps below.

Step 1: **Follow all anti-static procedures**. See **Section 4.2**.

Step 2: **Turn off the power**. See **Section 4.3**.

Step 3: Remove a total of 11 retention screws from the back cover, nine on the rear of the frame and two on the rear panel (**Figure 4-1**).

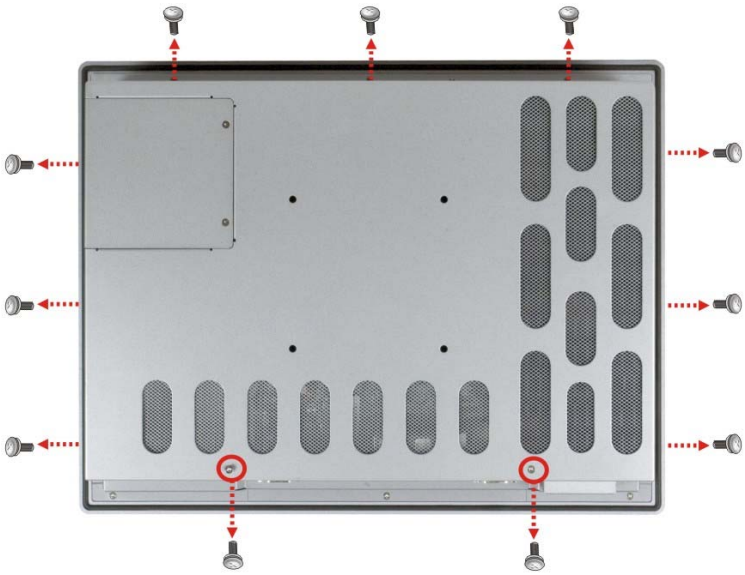

Figure 4-1: Back Cover Retention Screws

Step 4: Carefully separate the back cover from the chassis and lift the cover clear of the device

4.5 Memory Module Replacement

The flat bezel panel PC is preinstalled with a 1.0 GB DDR3 memory module. If the memory module fails, follow the instructions below to replace the memory module.

Step 1: Follow all anti-static procedures. See **Section 4.2**.

Step 2: Turn off the power. See **Section 4.3**.

Step 3: Remove the back cover. See **Section 4.4** above.

Step 4: Locate the DDR3 SO-DIMM on the motherboard.

Step 5: Remove the DDR3 memory module by pulling both the spring retainer clips outward from the socket.

Step 6: Grasp the DDR3 memory module by the edges and carefully pull it out of the socket.

Step 7: Install the new DDR3 memory module by pushing it into the socket at an angle (**Figure 4-2**).

Step 8: Gently pull the spring retainer clips of the SO-DIMM socket out and push the rear of the DDR memory module down (**Figure 4-2**).

Step 9: Release the spring retainer clips on the SO-DIMM socket. They clip into place and secure the DDR memory module in the socket.

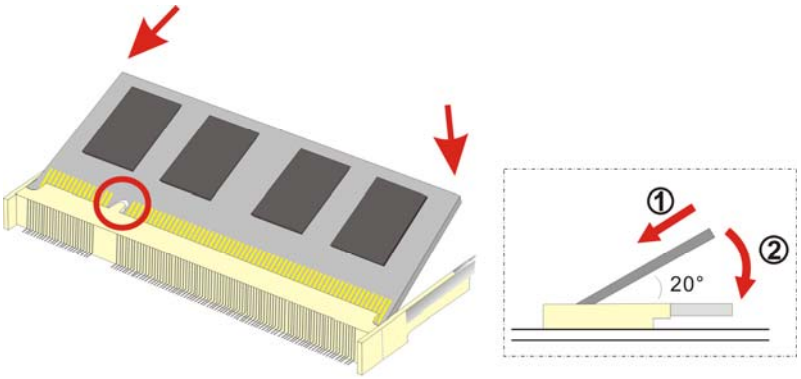

Figure 4-2: DDR SO-DIMM Module Installation

Step 10: Replace the internal aluminum cover and secure it to the chassis using six (6) retention screws.

Step 11: Replace the back cover and secure it using nine (9) previously removed retention screws.

Chapter

5

AMI BIOS Setup

5.1 Introduction

The BIOS is programmed onto the BIOS chip. The BIOS setup program allows changes to certain system settings. This chapter outlines the options that can be changed.

NOTE:

Some of the BIOS options may vary throughout the life cycle of the product and are subject to change without prior notice.

5.1.1 Starting Setup

The UEFI BIOS is activated when the computer is turned on. The setup program can be activated in one of two ways.

1. Press the **DELETE** or **F2** key as soon as the system is turned on or
2. Press the **DELETE** or **F2** key when the "**Press DELETE or F2 to enter SETUP**" message appears on the screen.

If the message disappears before the **DELETE** or **F2** key is pressed, restart the computer and try again.

5.1.2 Using Setup

Use the arrow keys to highlight items, press **ENTER** to select, use the PageUp and PageDown keys to change entries, press **F1** for help and press **ESC** to quit. Navigation keys are shown in the following table.

Key	Function
Up arrow	Move to the item above
Down arrow	Move to the item below
Left arrow	Move to the item on the left hand side
Right arrow	Move to the item on the right hand side

Key	Function
+	Increase the numeric value or make changes
-	Decrease the numeric value or make changes
Page up	Move to the next page
Page down	Move to the previous page
Esc	Main Menu – Quit and do not save changes into CMOS Status Page Setup Menu and Option Page Setup Menu -- Exit current page and return to Main Menu
F1	General help, only for Status Page Setup Menu and Option Page Setup Menu
F9	Load optimized defaults
F10	Save changes and Exit BIOS

Table 5-1: BIOS Navigation Keys

5.1.3 Getting Help

When **F1** is pressed a small help window describing the appropriate keys to use and the possible selections for the highlighted item appears. To exit the Help Window press **Esc** or the **F1** key again.

5.1.4 BIOS Menu Bar

The **menu bar** on top of the BIOS screen has the following main items:

- Main – Changes the basic system configuration.
- Advanced – Changes the advanced system settings.
- Chipset – Changes the chipset settings.
- Boot – Changes the system boot configuration.
- Save & Exit – Selects exit options and loads default settings

The following sections completely describe the configuration options found in the menu items at the top of the BIOS screen and listed above.

5.2 Main

The **Main** BIOS menu (**BIOS Menu 1**) appears when the **BIOS Setup** program is entered. The **Main** menu gives an overview of the basic system information.

```
      Aptio Setup Utility – Copyright (C) 2011 American Megatrends, Inc.
  Main    Advanced   Chipset    Boot     Security   Save & Exit

BIOS Information                                   Set the Time. Use Tab to
BIOS Vendor                    American Megatrends switch between Time
Core Version                   4.6.4.0 0.23        elements.
Compliency                     UEFI 2.0
Project Version                SEE4AR11.ROM
Build Date                     12/17/2013 15:36:48 ----------------------

IWDD Vendor                    ICP                 ←→: Select Screen
IWDD Version                   SEE4ER10.BIN        ↑ ↓: Select Item
                                                   EnterSelect
System Date                    [Tue 10/13/2014]    +/-: Change Opt.
System Time                    [14:20:27]          F1:  General Help
                                                   F2:  Previous Values
Access Level                   Administrator       F3:  Optimized Defaults
                                                   F4:  Save & Exit
                                                   ESC: Exit
        Version 2.11.1210. Copyright (C) 2011 American Megatrends, Inc.
```

BIOS Menu 1: Main

➔ BIOS Information

The **BIOS Information** lists a brief summary of the BIOS. The fields in **BIOS Information** cannot be changed. The items shown in the system overview include:

- **BIOS Vendor:** Installed BIOS vendor
- **Core Version:** Current BIOS version
- **Compliency:** compliant UEFI specification version
- **Project Version:** the board version
- **Build Date:** Date the current BIOS version was made

➔ System Date [xx/xx/xx]

Use the **System Date** option to set the system date. Manually enter the day, month and year.

➔ **System Time [xx:xx:xx]**

Use the **System Time** option to set the system time. Manually enter the hours, minutes and seconds.

5.3 Advanced

Use the **Advanced** menu (**BIOS Menu 2**) to configure the CPU and peripheral devices through the following sub-menus:

WARNING!

Setting the wrong values in the sections below may cause the system to malfunction. Make sure that the settings made are compatible with the hardware.

```
        Aptio Setup Utility – Copyright (C) 2011 American Megatrends, Inc.
   Main    Advanced   Chipset    Boot      Security    Save & Exit

> ACPI Settings                                    System ACPI Parameters
> RTC Wake Settings
> CPU Configuration
> IDE Configuration
> USB Configuration                                ----------------------
> Super IO Configuration
> H/M Monitor                                      ←→: Select Screen
> Serial Port Console Redirection                  ↑ ↓: Select Item
> iEi Feature                                      EnterSelect
                                                   +/-: Change Opt.
                                                   F1:  General Help
                                                   F2:  Previous Values
                                                   F3:   Optimized Defaults
                                                   F4:   Save & Exit
                                                   ESC:  Exit
         Version 2.11.1210. Copyright (C) 2011 American Megatrends, Inc.
```

BIOS Menu 2: Advanced

5.3.1 ACPI Settings

The **ACPI Settings** menu (**BIOS Menu 3**) configures the Advanced Configuration and Power Interface (ACPI) options.

```
Aptio Setup Utility – Copyright (C) 2011 American Megatrends, Inc.
Advanced

ACPI Sleep State                    [S1 (CPU Stop Clock)]   Select the highest ACPI
                                                            sleep state the system will
                                                            enter, when the SUSPEND
                                                            button is pressed.

                                                            ----------------------

                                                            ←→: Select Screen
                                                            ↑ ↓: Select Item
                                                            EnterSelect
                                                            F1   General Help
                                                            F2   Previous Values
                                                            F3    Optimized Defaults
                                                            F4    Save
                                                            ESC   Exit
Version 2.11.1210. Copyright (C) 2011 American Megatrends, Inc.
```

BIOS Menu 3: ACPI Configuration

➔ **ACPI Sleep State [S1 (CPU Stop Clock)]**

Use the **ACPI Sleep State** option to specify the sleep state the system enters when it is not being used.

➔ **S1 (CPU Stop Clock)** DEFAULT	The system enters S1(POS) sleep state. The system appears off. The CPU is stopped; RAM is refreshed; the system is running in a low power mode.
➔ **S3 (Suspend to RAM)**	The caches are flushed and the CPU is powered off. Power to the RAM is maintained. The computer returns slower to a working state, but more power is saved.

5.3.2 RTC Wake Settings

The **RTC Wake Settings** menu (**BIOS Menu 4**) configures RTC wake event.

```
Aptio Setup Utility – Copyright (C) 2011 American Megatrends, Inc.
Advanced

Wake System with Fixed Time      [Disabled]

Select the highest ACPI
sleep state the system will
enter, when the SUSPEND
button is pressed.

----------------------

←→: Select Screen
↑↓: Select Item
Enter Select
F1   General Help
F2   Previous Values
F3   Optimized Defaults
F4   Save
ESC  Exit

Version 2.11.1210. Copyright (C) 2011 American Megatrends, Inc.
```

BIOS Menu 4: RTC Wake Settings

➔ **Wake System with Fixed Time [Disabled]**

Use the **Wake System with Fixed Time** option to specify the time the system should be roused from a suspended state.

➔ **Disabled** **DEFAULT** The real time clock (RTC) cannot generate a wake event

➔ **Enabled**

If selected, the following appears with values that can be selected:

*Wake up every day

*Wake up date

*Wake up hour

*Wake up minute

*Wake up second

After setting the alarm, the computer turns itself on from a suspend state when the alarm goes off.

5.3.3 CPU Configuration

Use the **CPU Configuration** menu (**BIOS Menu 5**) to view detailed CPU specifications and configure the CPU.

```
Aptio Setup Utility – Copyright (C) 2011 American Megatrends, Inc.
  Advanced

CPU Configuration                                  Enabled for Windows XP and
                                                   Linux (OS) optimized for
Processor Type                  Intel(R) Atom(TM)  Hyper-Threading
                                CPU D525 @ 1.80GHz Technology) and Disabled
EMT64                           Supported          for other OS (OS not
Processor Speed                 1800 MHz           optimized for
System Bus Speed                800 MHz            Hyper-Threading
Ratio Status                    9                  Technology)
Actual Ratio                    9
Processor Stepping              106ca
Microcode Revision              263
L1 Cache RAM                    2x56 k             ----------------------
L2 Cache RAM                    2x512 k
Processor Cores                 Dual               ←→: Select Screen
Hyper-Threading                 Supported          ↑ ↓: Select Item
                                                   EnterSelect
Hyper-Threading                 [Enabled]          F1   General Help
                                                   F2   Previous Values
                                                   F3    Optimized Defaults
                                                   F4    Save
                                                   ESC   Exit
Version 2.11.1210. Copyright (C) 2011 American Megatrends, Inc.
```

BIOS Menu 5: CPU Configuration

The CPU Configuration menu (**BIOS Menu 5**) lists the following CPU details:

- Processor Type: Lists the brand name of the CPU being used
- EMT64: Indicates if EM64T is supported by the CPU.
- Processor Speed: Lists the CPU processing speed
- System Bus Speed: Lists the system bus speed
- Ratio Status: Lists the ratio status
- Actual Ratio: Lists the actual ratio
- Processor Stepping: Lists the CPU processing stepping
- Microcode Revision: Lists the microcode revision
- L1 Cache RAM: Lists the amount of storage space on the L1 Cache
- L2 Cache RAM: Lists the amount of storage space on the L2 Cache
- Processor Core: Lists the number of the processor cores
- Hyper-Threading: Indicates if Hyper-Threading is supported by the CPU.
- Intel® Virtualization Technology [Disabled]

➔ **Hyper Threading Function [Enabled]**

Use the Hyper Threading function to enable or disable the CPU hyper threading function.

➔	**Disabled**		Disables the use of hyper threading technology
➔	**Enabled**	**DEFAULT**	Enables the use of hyper threading technology

5.3.4 IDE Configuration

Use the **IDE Configuration** menu (**BIOS Menu 6**) to change and/or set the configuration of the IDE or SATA devices installed in the system.

```
Aptio Setup Utility – Copyright (C) 2011 American Megatrends, Inc.
  Advanced

PATA Master                      Not Present        Select ATA or IDE
                                                    Configuration
SATA Port1                       Not Present

ATA Or IDE Configuration         [Enhanced]         ---------------------
  Configure SATA as              [IDE]
                                                    ←→: Select Screen
                                                    ↑ ↓: Select Item
                                                    EnterSelect
                                                    F1   General Help
                                                    F2   Previous Values
                                                    F3   Optimized Defaults
                                                    F4   Save
                                                    ESC  Exit
Version 2.11.1210. Copyright (C) 2011 American Megatrends, Inc.
```

BIOS Menu 6: IDE Configuration

➔ **ATA or IDE Configurations [Enhanced]**

Use the **ATA/IDE Configurations** option to configure the ATA/IDE controller.

➔ **Disabled** Disables the on-board ATA/IDE controller.

➔ **Compatible** Configures the on-board ATA/IDE controller to be in compatible mode. In this mode, a SATA channel will replace one of the IDE channels. This mode supports up to 4 storage devices.

➔ **Enhanced** **DEFAULT** Configures the on-board ATA/IDE controller to be in Enhanced mode. In this mode, IDE channels and SATA channels are separated. This mode supports up to 6 storage devices. Some legacy OS do not support this mode.

➔ **Configure SATA as [IDE]**

Use the **Configure SATA as** option to configure SATA devices as normal IDE devices.

➔ **IDE**	**DEFAULT**	Configures SATA devices as normal IDE device.
➔ **AHCI**		The SATA drive connected to the nth SATA drive port is specified as a normal SATA drive.

5.3.5 USB Configuration

Use the **USB Configuration** menu (**BIOS Menu 7**) to read USB configuration information and configure the USB settings.

```
Aptio Setup Utility – Copyright (C) 2011 American Megatrends, Inc.
Advanced

USB Configuration                                  Enables Legacy USB
                                                   support. AUTO option
USB Devices:                                       disables legacy support
      1 Keyboard                                   if no USB devices are
                                                   connected. DISABLE
Legacy USB Support              [Enabled]          option will keep USB
                                                   devices available only
                                                   for EFI applications.

                                                   ---------------------
                                                   ←→: Select Screen
                                                   ↑ ↓: Select Item
                                                   EnterSelect
                                                   F1   General Help
                                                   F2   Previous Values
                                                   F3    Optimized
                                                   Defaults
                                                   F4    Save
                                                   ESC   Exit
Version 2.11.1210. Copyright (C) 2011 American Megatrends, Inc.
```

BIOS Menu 7: USB Configuration

➔ **USB Devices**

The **USB Devices Enabled** field lists the USB devices that are enabled on the system

➔ **Legacy USB Support [Enabled]**

Use the **Legacy USB Support** BIOS option to enable USB mouse and USB keyboard support. Normally if this option is not enabled, any attached USB mouse or USB keyboard does not become available until a USB compatible operating system is fully booted with all USB drivers loaded. When this option is enabled, any attached USB mouse or USB keyboard can control the system even when there is no USB driver loaded onto the system.

➔ **Enabled**	**DEFAULT**	Legacy USB support enabled
➔ **Disabled**		Legacy USB support disabled
➔ **Auto**		Legacy USB support disabled if no USB devices are connected

5.3.6 Super IO Configuration

Use the **Super IO Configuration** menu (**BIOS Menu 8**) to set or change the configurations for the serial ports.

```
Aptio Setup Utility – Copyright (C) 2011 American Megatrends, Inc.
Advanced

Super IO Configuration                          Set Parameters of Serial
                                                Port 1 (COMA)
Super IO Chip                  Fintek F81865
> Serial Port 1 Configuration
> Serial Port 2 Configuration                   ---------------------
> Serial Port 3 Configuration                   ←→: Select Screen
> Serial Port 4 Configuration                   ↑ ↓: Select Item
> Serial Port 5 Configuration                   EnterSelect
                                                F1   General Help
                                                F2   Previous Values
                                                F3   Optimized Defaults
                                                F4   Save
                                                ESC  Exit
Version 2.11.1210. Copyright (C) 2011 American Megatrends, Inc.
```

BIOS Menu 8: Super IO Configuration

5.3.6.1 Serial Port n Configuration

Use the **Serial Port n Configuration** menu (**BIOS Menu 9**) to configure the serial port n.

```
Aptio Setup Utility – Copyright (C) 2011 American Megatrends, Inc.
Advanced

Serial Port 1 Configuration                    Enable or Disable Serial
                                               Port (COM)
Serial Port                  [Enabled]
Device Settings              IO=3F8h; IRQ=4
                                               ---------------------
Change Settings              [Auto]            ←→: Select Screen
Serial Port 1 Mode           RS232             ↑ ↓: Select Item
                                               EnterSelect
                                               F1   General Help
                                               F2   Previous Values
                                               F3   Optimized Defaults
                                               F4   Save
                                               ESC  Exit
Version 2.11.1210. Copyright (C) 2011 American Megatrends, Inc.
```

BIOS Menu 9: Serial Port n Configuration Menu

5.3.6.1.1 Serial Port 1 Configuration

➔ **Serial Port [Enabled]**

Use the **Serial Port** option to enable or disable the serial port.

➔ **Disabled**		Disable the serial port
➔ **Enabled**	**DEFAULT**	Enable the serial port

➔ **Change Settings [Auto]**

Use the **Change Settings** option to change the serial port IO port address and interrupt address.

➔ **Auto**	**DEFAULT**	The serial port IO port address and interrupt address are automatically detected.

- **IO=3F8h; IRQ=4** — Serial Port I/O port address is 3F8h and the interrupt address is IRQ4
- **IO=3F8h; IRQ=3, 4** — Serial Port I/O port address is 3F8h and the interrupt address is IRQ3, 4
- **IO=2F8h; IRQ=3, 4** — Serial Port I/O port address is 2F8h and the interrupt address is IRQ3, 4

➔ **Serial Port 1 Mode [RS232]**

The **Serial Port 1 Mode** option is set the Serial Port 1 signaling mode to RS-232 and can not be changed.

5.3.6.1.2 Serial Port 2 Configuration

➔ **Serial Port [Enabled]**

Use the **Serial Port** option to enable or disable the serial port.

- **Disabled** — Disable the serial port
- **Enabled** DEFAULT — Enable the serial port

➔ **Change Settings [Auto]**

Use the **Change Settings** option to change the serial port IO port address and interrupt address.

- **Auto** DEFAULT — The serial port IO port address and interrupt address are automatically detected.
- **IO=2F8h; IRQ=3** — Serial Port I/O port address is 2F8h and the interrupt address is IRQ3
- **IO=3F8h; IRQ=3, 4** — Serial Port I/O port address is 3F8h and the interrupt address is IRQ3, 4
- **IO=2F8h; IRQ=3, 4** — Serial Port I/O port address is 2F8h and the interrupt address is IRQ3, 4

➔ **Serial Port 2 Mode [RS232]**

The **Serial Port 2 Mode** option is set the Serial Port 2 signaling mode to RS-232 and can not be changed.

5.3.6.1.3 Serial Port 3 Configuration

➔ **Serial Port [Enabled]**

Use the **Serial Port** option to enable or disable the serial port.

➔ **Disabled**		Disable the serial port
➔ **Enabled**	**DEFAULT**	Enable the serial port

➔ **Change Settings [Auto]**

Use the **Change Settings** option to change the serial port IO port address and interrupt address.

➔ **Auto**	**DEFAULT**	The serial port IO port address and interrupt address are automatically detected.
➔ **IO=3E8h; IRQ=5**		Serial Port I/O port address is 3E8h and the interrupt address is IRQ5
➔ **IO=3E8h; IRQ=5, 7**		Serial Port I/O port address is 3E8h and the interrupt address is IRQ5, 7
➔ **IO=2E8h; IRQ=5, 7**		Serial Port I/O port address is 2E8h and the interrupt address is IRQ5, 7

➔ **Serial Port 3 Mode [RS232]**

Use the **Serial Port 3 Mode** option shows the Serial Port 3 signaling mode is set to RS-232 and can not be changed. The serial port 3 mode is set by the 10-pin DIP switch on the motherboard. Please see **Section 3.9.4.1** for detail.

5.3.6.1.4 Serial Port 4 Configuration

➔ **Serial Port [Enabled]**

Use the **Serial Port** option to enable or disable the serial port.

➔ **Disabled**		Disable the serial port
➔ **Enabled**	**DEFAULT**	Enable the serial port

➔ **Change Settings [Auto]**

Use the **Change Settings** option to change the serial port IO port address and interrupt address.

➔ **Auto**	**DEFAULT**	The serial port IO port address and interrupt address are automatically detected.
➔ **IO=2E8h; IRQ=10**		Serial Port I/O port address is 2E8h and the interrupt address is IRQ10
➔ **IO=3E8h; IRQ=10, 11**		Serial Port I/O port address is 3E8h and the interrupt address is IRQ10, 11
➔ **IO=2E8h; IRQ=10, 11**		Serial Port I/O port address is 2E8h and the interrupt address is IRQ10, 11

➔ **Serial Port 4 Mode [RS422/485]**

The **Serial Port 4 Mode** option shows the Serial Port 4 signaling mode is set to RS-422/485 and can not be changed.

5.3.6.1.5 Serial Port 5 Configuration

➔ **Serial Port [Enabled]**

Use the **Serial Port** option to enable or disable the serial port.

➔ **Disabled**		Disable the serial port

➔ **Enabled** **DEFAULT** Enable the serial port

➔ **Change Settings [Auto]**

Use the **Change Settings** option to change the serial port IO port address and interrupt address.

➔ **Auto** **DEFAULT** The serial port IO port address and interrupt address are automatically detected.

➔ **IO=2C0h; IRQ=10** Serial Port I/O port address is 2C0h and the interrupt address is IRQ10

➔ **IO=2C0h; IRQ=10, 11** Serial Port I/O port address is 2C0h and the interrupt address is IRQ10, 11

➔ **IO=2C8h; IRQ=10, 11** Serial Port I/O port address is 2C8h and the interrupt address is IRQ10, 11

➔ **Serial Port 5 Mode [RS422/485]**

The **Serial Port 5 Mode** option is set the Serial Port 5 signaling mode to RS-422/485 and can not be changed.

5.3.7 H/W Monitor

The H/W Monitor menu (**BIOS Menu 10**) shows the operating temperature, fan speeds and system voltages.

```
Aptio Setup Utility – Copyright (C) 2011 American Megatrends, Inc.
Advanced

PC Health Status

CPU Temperature                    :+60 °C
Accuracy:1.(-5~+10)degree around 100 degree
         2.(-10~+15)degree around 50 degree
SYS Temperature                    :+37 °C
VCC3V                              :+3.280 V
V_core                             :+1.000 V
VCC5                               :+4.918 V
VCC3                               :+3.297 V
Vcc1_5VDDR                         :+1.552 V
VSB3V                              :+3.380 V
VBAT                               :+3.216 V

---------------------
←→: Select Screen
↑↓: Select Item
Enter Select
F1   General Help
F2   Previous Values
F3   Optimized Defaults
F4   Save
ESC  Exit

Version 2.11.1210. Copyright (C) 2011 American Megatrends, Inc.
```

BIOS Menu 10: Hardware Health Configuration

➔ **PC Health Status**

The following system parameters and values are shown. The system parameters that are monitored are:

- System Temperatures:
  - CPU Temperature
  - System Temperature
- Voltages:
  - VCC3V
  - V_core
  - VCC5
  - VCC3
  - Vcc1_5VDDR
  - VSB3V
  - VBAT

5.3.8 Serial Port Console Redirection

The **Serial Port Console Redirection** menu (**BIOS Menu 11**) allows the console redirection options to be configured. Console redirection allows users to maintain a system remotely by re-directing keyboard input and text output through the serial port.

```
Aptio Setup Utility – Copyright (C) 2011 American Megatrends, Inc.
 Advanced

COM1                                          Console Redirection
Console Redirection            [Disabled]     Enable or Disable
> Console Redirection Settings

COM2
Console Redirection            [Disabled]
> Console Redirection Settings                ---------------------
                                              ←→: Select Screen
COM3                                          ↑ ↓: Select Item
Console Redirection            [Disabled]     EnterSelect
> Console Redirection Settings                F1   General Help
                                              F2   Previous Values
                                              F3   Optimized Defaults
                                              F4   Save
                                              ESC  Exit
Version 2.11.1210. Copyright (C) 2011 American Megatrends, Inc.
```

BIOS Menu 11: Serial Port Console Redirection

➔ **Console Redirection [Disabled]**

Use **Console Redirection** option to enable or disable the console redirection function.

➔ **Disabled** **DEFAULT** Disabled the console redirection function

➔ **Enabled** Enabled the console redirection function

5.3.8.1 Console Redirection Settings

Use the **Console Redirection Settings** menu (**BIOS Menu 12**) to configure console redirection settings of the specified serial port. This menu appears only when the Console Redirection is enabled.

```
Aptio Setup Utility – Copyright (C) 2011 American Megatrends, Inc.
Advanced

COM1                                          Console Redirection
Console Redirection Settings                  Enable or Disable

Terminal Type                  [ANSI]
Bits per second                [115200]       ---------------------
Data Bits                      [8]            ←→: Select Screen
Parity                         [None]         ↑ ↓: Select Item
Stop Bits                      [1]            EnterSelect
                                              F1   General Help
                                              F2   Previous Values
                                              F3   Optimized Defaults
                                              F4   Save
                                              ESC  Exit

Version 2.11.1210. Copyright (C) 2011 American Megatrends, Inc.
```

BIOS Menu 12: Console Redirection Settings

➔ **Terminal Type [ANSI]**

Use the **Terminal Type** option to specify the remote terminal type.

➔ **VT100**		The target terminal type is VT100
➔ **VT100+**		The target terminal type is VT100+
➔ **VT-UTF8**		The target terminal type is VT-UTF8
➔ **ANSI**	**DEFAULT**	The target terminal type is ANSI

➔ **Bits per second [115200]**

Use the **Bits per second** option to select serial port transmission speed. The speed must match on the other side. Long or noisy lines may require lower speeds. The options include:

- 9600
- 19200
- 38400
- 57600
- 115200 **DEFAULT**

5.3.9 IEI Feature

Use the **IEI Feature** menu (**BIOS Menu 13**) to configure One Key Recovery function.

```
Aptio Setup Utility – Copyright (C) 2011 American Megatrends, Inc.
Advanced

iEi Feature                                   Auto Recovery Function
                                              Reboot and recovery
Auto Recovery Function          [Disabled]    system automatically
                                              within 10 min, when OS
                                              crashes. Please install
                                              Auto Recovery API
                                              service before enabling
                                              this function

                                              ----------------------
                                              ←→   Select Screen
                                              ↑↓   Select Item
                                              Enter Go to SubScreen
                                              F1    General Help
                                              F10   Save and Exit
                                              ESC   Exit
Version 2.11.1210. Copyright (C) 2011 American Megatrends, Inc.
```

BIOS Menu 13: IEI Feature

➔ **Auto Recovery Function [Disabled]**

Use the **Auto Recovery Function** BIOS option to enable or disable the auto recovery function of the IEI One Key Recovery.

➔ **Disabled** **DEFAULT** Auto recovery function disabled

➔ **Enabled** Auto recovery function enabled

5.4 Chipset

Use the **Chipset** menu (**BIOS Menu 14**) to access the Northbridge and Southbridge configuration menus.

WARNING!

Setting the wrong values for the Chipset BIOS selections in the Chipset BIOS menu may cause the system to malfunction.

```
        Aptio Setup Utility – Copyright (C) 2011 American Megatrends, Inc.
  Main    Advanced  Chipset    Boot     Security   Save & Exit

> Host Bridge                                      Host Bridge Parameters
> South Bridge
> Intel IGD SWSCI OpRegion

                                                   ---------------------
                                                   ←→: Select Screen
                                                   ↑ ↓: Select Item
                                                   EnterSelect
                                                   F1   General Help
                                                   F2   Previous Values
                                                   F3    Optimized Defaults
                                                   F4    Save
                                                   ESC   Exit

         Version 2.11.1210. Copyright (C) 2011 American Megatrends, Inc.
```

BIOS Menu 14: Chipset

5.4.1 Host Bridge Configuration

Use the **Host Bridge Configuration** menu (**BIOS Menu 15**) to configure the Northbridge chipset.

```
Aptio Setup Utility – Copyright (C) 2011 American Megatrends, Inc.
                    Chipset

> OnChip VGA Configuration                  Config On Chip VGA
  Initate Graphic Adapter        [IGD]      Settings.

******* Memory Information *******
Memory Frequency                 800 Mhz

                                            ---------------------
Total Memory                     1024 MB    ←→: Select Screen
                                            ↑ ↓: Select Item
DIMM#0                           1024 MB    EnterSelect
                                            F1   General Help
                                            F2   Previous Values
                                            F3    Optimized Defaults
                                            F4    Save
                                            ESC   Exit
Version 2.11.1210. Copyright (C) 2011 American Megatrends, Inc.
```

BIOS Menu 15: Host Bridge Chipset Configuration

➔ **Initiate Graphics Adapter [IGD]**

Use the **Initiate Graphics Adapter** option to select the graphics controller used as the primary boot device. Select either an integrated graphics controller (IGD) or a combination of PCI graphics controller, a PCI express (PEG) controller or an IGD. Configuration options are listed below:

- IGD
- PCI/IGD **DEFAULT**

5.4.1.1 OnChip VGA Configuration

Use the **OnChip VGA Configuration** menu (**BIOS Menu 16**) to configure the OnChip VGA.

```
Aptio Setup Utility – Copyright (C) 2011 American Megatrends, Inc.
                    Chipset

OnChip VGA Configuration                    Select Share Memory Size.

IGD Memory                    [8 MB]

                                            ---------------------
                                            ←→: Select Screen
                                            ↑ ↓: Select Item
                                            EnterSelect
                                            F1   General Help
                                            F2   Previous Values
                                            F3    Optimized Defaults
                                            F4    Save
                                            ESC   Exit
Version 2.11.1210. Copyright (C) 2011 American Megatrends, Inc.
```

BIOS Menu 16: OnChip VGA Configuration

➔ **IGD Memory [8 MB]**

Use the **IGD Memory Size** option to set the amount of system memory allocated to the integrated graphics processor when the system boots. The system memory allocated can then only be used as graphics memory, and is no longer available to applications or the operating system. Configuration options are listed below:

- Disabled
- 8 MB **Default**

5.4.2 South Bridge Configuration

Use the **South Bridge Configuration** menu (**BIOS Menu 17**) to configure the Southbridge chipset.

```
Aptio Setup Utility – Copyright (C) 2011 American Megatrends, Inc.
                    Chipset

Auto Power Button Function        [Enabled]        Select AC power state when
Restore AC Power Loss             [Last State]     power is re-applied after
High Definition Audio Controller  [Enabled]        a power failure. When Auto
Set Spread Spectrum function      [Disabled]       Power Button Function
                                                   select Enabled the AC power
WIFI Support                      [Enabled]        loss will always power on.
Auto Dimming Support              [Disabled]
Power Saving Function             [Disabled]

                                                   ---------------------
                                                   ←→: Select Screen
                                                   ↑ ↓: Select Item
                                                   EnterSelect
                                                   F1   General Help
                                                   F2   Previous Values
                                                   F3   Optimized Defaults
                                                   F4   Save
                                                   ESC  Exit
Version 2.11.1210. Copyright (C) 2011 American Megatrends, Inc.
```

BIOS Menu 17: South Bridge Chipset Configuration

➔ **Restore on AC Power Loss [Last State]**

Use the **Restore on AC Power Loss** BIOS option to specify what state the system returns to if there is a sudden loss of power to the system.

➔ **Power Off** The system remains turned off

➔ **Power On** The system turns on

➔ **Last State** **DEFAULT** The system returns to its previous state. If it was on, it turns itself on. If it was off, it remains off.

➔ **High Definition Audio Controller [Enabled]**

The **High Definition Audio Controller** option enables or disables the High Definition (HD) Audio controller.

➔ **Enabled**	**DEFAULT**	The onboard HD Audio controller is enabled
➔ **Disabled**		The onboard HD Audio controller is disabled

➔ **Set Spread Spectrum function [Disabled]**

Use the **Set Spread Spectrum function** option to reduce the EMI. Excess EMI is generated when the system clock generator pulses have extreme values. Spreading the pulse spectrum modulates changes in the extreme values from spikes to flat curves, thus reducing the EMI. This benefit may in some cases be outweighed by problems with timing-critical devices, such as a clock-sensitive SCSI device.

➔ **Disabled**	**DEFAULT**	EMI not reduced
➔ **Enabled**		EMI reduced

➔ **WIFI Support [Enabled]**

Use the **WIFI Support** option to enable or disable the Wi-Fi function.

➔ **Enabled**	**DEFAULT**	Enables Wi-Fi function
➔ **Disabled**		Disables Wi-Fi function

➔ **Auto Dimming Support [Disabled]**

Use the **Auto Dimming Support** option to enable or disable the auto dimming function.

➔ **Enabled**		Enables auto dimming function
➔ **Disabled**	**DEFAULT**	Disables auto dimming function

➔ **Power Saving Function [Disabled]**

Use the **Power Saving Function** option to enable or disable the power saving function to reduce the power consumption when the system is off.

➔ **Disabled** **DEFAULT** Disable power saving function

➔ **Enabled** Enable power saving function

5.4.3 Intel IGD SWSCI OpRegion

Use the **Intel IGD SWSCI OpRegion** menu (**BIOS Menu 18**) to configure the video device connected to the system.

```
Aptio Setup Utility – Copyright (C) 2011 American Megatrends, Inc.
                    Chipset

Intel IGD SWSCI OpRegion Configuration                Select DVMT Mode/Fixed
                                                      Mode
DVMT Mode Select                  [DVMT Mode]
DVMT/FIXED Memory                 [Maximum]
IGD - Boot Type                   [VBIOS Default]
LCD Panel Type                    [1024x768 18bit]

                                                      ---------------------
                                                      ←→: Select Screen
                                                      ↑ ↓: Select Item
                                                      EnterSelect
                                                      F1   General Help
                                                      F2   Previous Values
                                                      F3    Optimized Defaults
                                                      F4    Save
                                                      ESC   Exit
Version 2.11.1210. Copyright (C) 2011 American Megatrends, Inc.
```

BIOS Menu 18: Intel IGD SWSCI OpRegion

➔ **DVMT Mode Select [DVMT Mode]**

Use the **DVMT Mode Select** option to select the Intel Dynamic Video Memory Technology (DVMT) operating mode.

➔ **Fixed Mode** A fixed portion of graphics memory is reserved as graphics memory.

➔ **DVMT Mode** **DEFAULT** Graphics memory is dynamically allocated according to the system and graphics needs.

➔ **DVMT/FIXED Memory [Maximum]**

Use the **DVMT/FIXED Memory** option to specify the maximum amount of memory that can be allocated as graphics memory. Configuration options are listed below.

- 128 MB
- 256 MB
- Maximum **Default**

➔ **IGD - Boot Type [VBIOS Default]**

Use the **IGD - Boot Type** option to select the display device used by the system when it boots. Configuration options are listed below.

- VBIOS Default **DEFAULT**
- CRT
- LFP
- CRT + LFP

5.5 Boot

Use the **Boot** menu (**BIOS Menu 19**) to configure system boot options.

```
Aptio Setup Utility – Copyright (C) 2011 American Megatrends, Inc.
Main   Advanced   Chipset   Boot   Security   Save & Exit

Boot Configuration                          Select the keyboard
Bootup NumLock State          [On]          NumLock state

Quiet Boot                    [Enabled]
Launch PXE OpROM              [Disabled]    ---------------------
UEFI Boot                     [Disabled]    ←→: Select Screen
                                            ↑ ↓: Select Item
Boot Option Priorities                      EnterSelect
                                            F1   General Help
                                            F2   Previous Values
                                            F3    Optimized
                                            Defaults
                                            F4    Save
                                            ESC   Exit
Version 2.11.1210. Copyright (C) 2011 American Megatrends, Inc.
```

BIOS Menu 19: Boot

➔ **Bootup NumLock State [On]**

Use the **Bootup NumLock State** BIOS option to specify if the number lock setting must be modified during boot up.

➔ **On**	**DEFAULT**	Allows the Number Lock on the keyboard to be enabled automatically when the computer system boots up. This allows the immediate use of the 10-key numeric keypad located on the right side of the keyboard. To confirm this, the Number Lock LED light on the keyboard is lit.
➔ **Off**		Does not enable the keyboard Number Lock automatically. To use the 10-keys on the keyboard, press the Number Lock key located on the upper left-hand corner of the 10-key pad. The Number Lock LED on the keyboard lights up when the Number Lock is engaged.

➔ **Quiet Boot [Enabled]**

Use the **Quiet Boot** BIOS option to select the screen display when the system boots.

➔ **Disabled**		Normal POST messages displayed
➔ **Enabled**	**DEFAULT**	OEM Logo displayed instead of POST messages

➔ **Launch PXE OpROM [Disabled]**

Use the **Launch PXE OpROM** option to enable or disable boot option for legacy network devices.

➔ **Disabled**	**DEFAULT**	Ignore all PXE Option ROMs
➔ **Enabled**		Load PXE Option ROMs

➔ **UEFI Boot [Disabled]**

Use the **UEFI Boot** option to enable or disable to boot from a UEFI device.

➔ **Enabled**		Enable to boot from a UEFI device.
➔ **Disabled**	**DEFAULT**	Disable to boot from a UEFI device.

5.6 Security

Use the **Security** menu (**BIOS Menu 20**) to set system and user passwords.

```
      Aptio Setup Utility – Copyright (C) 2010 American Megatrends, Inc.
  Main    Advanced  Chipset    Boot    Security  Save & Exit

Password Description                                  Set Administrator
                                                      Password
If ONLY the Administrator's password is set,
then this only limits access to Setup and is
only asked for when entering Setup                    ---------------------
If ONLY the User's password is set, then this         ←→: Select Screen
is a power on password and must be entered to         ↑ ↓: Select Item
boot or enter Setup. In Setup the User will           EnterSelect
have Administrator rights.                            F1   General Help
The password must be 3 to 20 characters long.         F2   Previous Values
                                                      F3    Optimized
Administrator Password                                Defaults
User Password                                         F4    Save
                                                      ESC   Exit
        Version 2.11.1210. Copyright (C) 2011 American Megatrends, Inc.
```

BIOS Menu 20: Security

➔ **Administrator Password**

Use the **Administrator Password** to set or change an administrator password.

➔ **User Password**

Use the **User Password** to set or change a user password.

5.7 Save & Exit

Use the **Save & Exit** menu (**BIOS Menu 21**) to load default BIOS values, optimal failsafe values and to save configuration changes.

```
      Aptio Setup Utility – Copyright (C) 2011 American Megatrends, Inc.
  Main    Advanced   Chipset    Boot     Security   Save & Exit

  Save Changes and Reset                          Reset the system after
  Discard Changes and Reset                       saving the changes.

  Restore Defaults
  Save as User Defaults
  Restore User Defaults                           ---------------------
                                                  ←→: Select Screen
                                                  ↑ ↓: Select Item
                                                  EnterSelect
                                                  F1   General Help
                                                  F2   Previous Values
                                                  F3    Optimized
                                                  Defaults
                                                  F4    Save
                                                  ESC   Exit
      Version 2.11.1210. Copyright (C) 2011 American Megatrends, Inc.
```

BIOS Menu 21: Save & Exit

➔ **Save Changes and Reset**

Use the **Save Changes and Reset** option to save the changes made to the BIOS options and reset the system.

➔ **Discard Changes and Reset**

Use the **Discard Changes and Reset** option to exit the system without saving the changes made to the BIOS configuration setup program.

➔ **Restore Defaults**

Use the **Restore Defaults** option to load the optimal default values for each of the parameters on the Setup menus. **F3 key can be used for this operation.**

➔ **Save as User Defaults**

Use the **Save as User Defaults** option to save the changes done so far as user defaults.

➔ **Restore User Defaults**

Use the **Restore User Defaults** option to restore the user defaults to all the setup options.

Chapter

6

Software Drivers

6.1 Available Software Drivers

NOTE:

The content of the CD may vary throughout the life cycle of the product and is subject to change without prior notice. Visit the IEI website or contact technical support for the latest updates.

The following drivers can be installed on the system:

- Chipset
- Graphics
- LAN
- Touchscreen
- USB 3.0

Installation instructions are given below.

6.2 Starting the Driver Program

To access the driver installation programs, please do the following.

Step 1: Insert the CD-ROM that came with the system into a CD-ROM drive attached to the system.

Step 2: Click **PPC-5152-D525-E**.

Step 3: A list of available drivers appears.

6.3 Chipset Driver Installation

To install the chipset driver, please do the following.

Step 1: Access the driver list. (See **Section 6.2**)

Step 2: Click "**Chipset**" and select the folder which corresponds to the operating system.

Step 3: Locate the setup file and double click on it.

Step 4: The setup files are extracted as shown in **Figure 6-1**.

Figure 6-1: Chipset Driver Screen

Step 5: When the setup files are completely extracted the **Welcome Screen** in **Figure 6-2** appears.

Step 6: Click **Next** to continue.

Figure 6-2: Chipset Driver Welcome Screen

Step 7: The license agreement in **Figure 6-3** appears.

Step 8: Read the **License Agreement**.

Step 9: Click **Yes** to continue.

Figure 6-3: Chipset Driver License Agreement

Step 10: The **Read Me** file in **Figure 6-4** appears.

Step 11: Click **Next** to continue.

Figure 6-4: Chipset Driver Read Me File

Step 12: **Setup Operations** are performed as shown in **Figure 6-5**.

Step 13: Once the **Setup Operations** are complete, click **Next** to continue.

Figure 6-5: Chipset Driver Setup Operations

Step 14: The **Finish** screen in **Figure 6-6** appears.

Step 15: Select "**Yes, I want to restart this computer now**" and click **Finish**.

Figure 6-6: Chipset Driver Installation Finish Screen

6.4 Graphics Driver Installation

To install the Graphics driver, please do the following.

Step 1: Access the driver list. (See **Section 6.2**)

Step 2: Click "**Graphic**" and select the folder which corresponds to the operating system.

Step 3: Double click the setup file.

Step 4: The **Read Me** file in **Figure 6-7** appears.

Step 5: Click **Next** to continue.

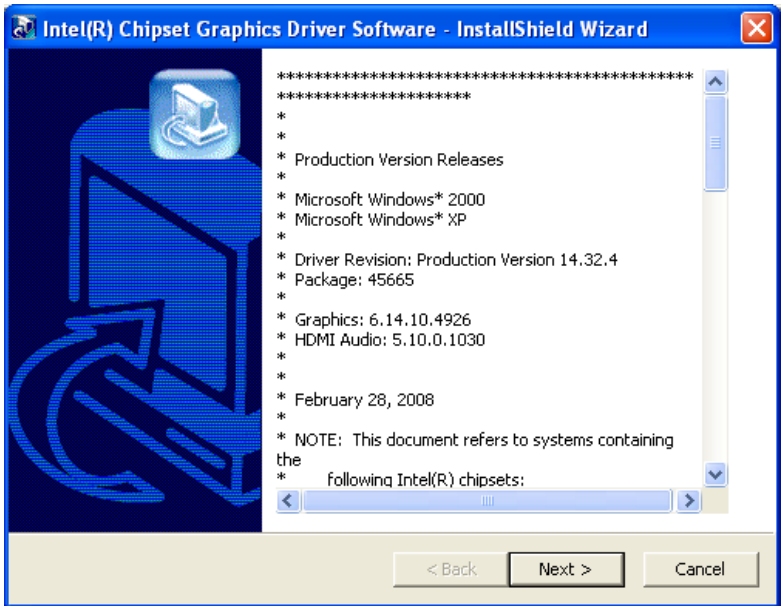

Figure 6-7: Graphics Driver Read Me File

Step 6: The installation files are extracted. See **Figure 6-8**.

Step 7: Click **Next** to continue.

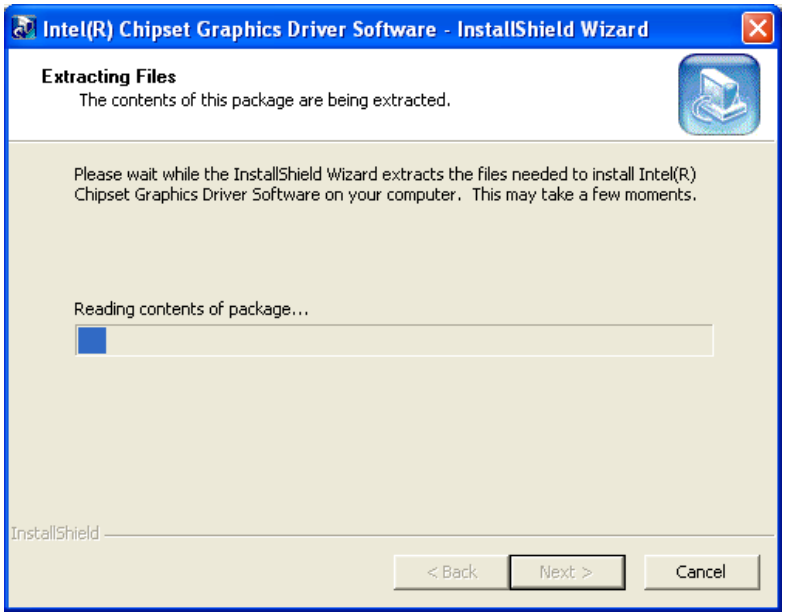

Figure 6-8: Graphics Driver Setup Files Extracted

Step 8: The **Welcome Screen** in **Figure 6-9** appears.

Step 9: Click **Next** to continue.

Figure 6-9: Graphics Driver Welcome Screen

Step 10: The **License Agreement** in **Figure 6-10** appears.

Step 11: Click **Yes** to accept the agreement and continue.

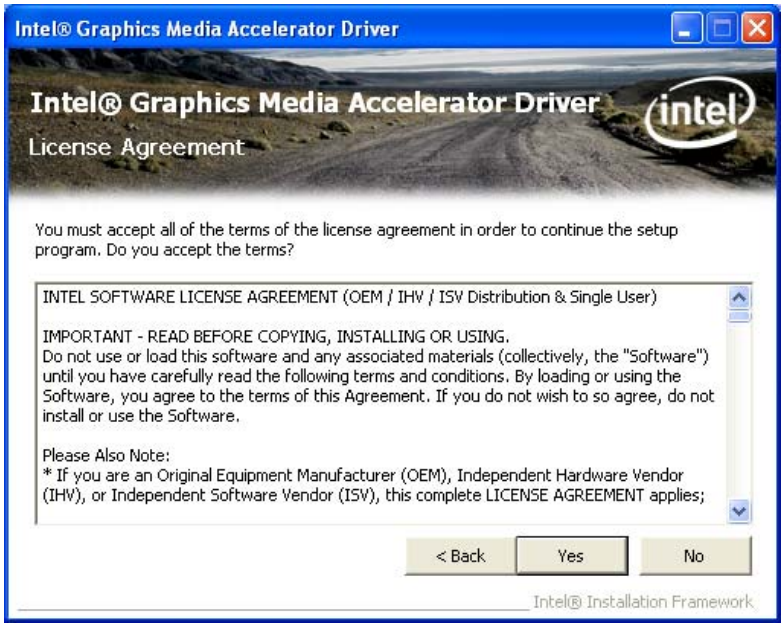

Figure 6-10: Graphics Driver License Agreement

Step 12: The **Read Me** file in **Figure 6-11** appears.

Step 13: Click **Next** to continue.

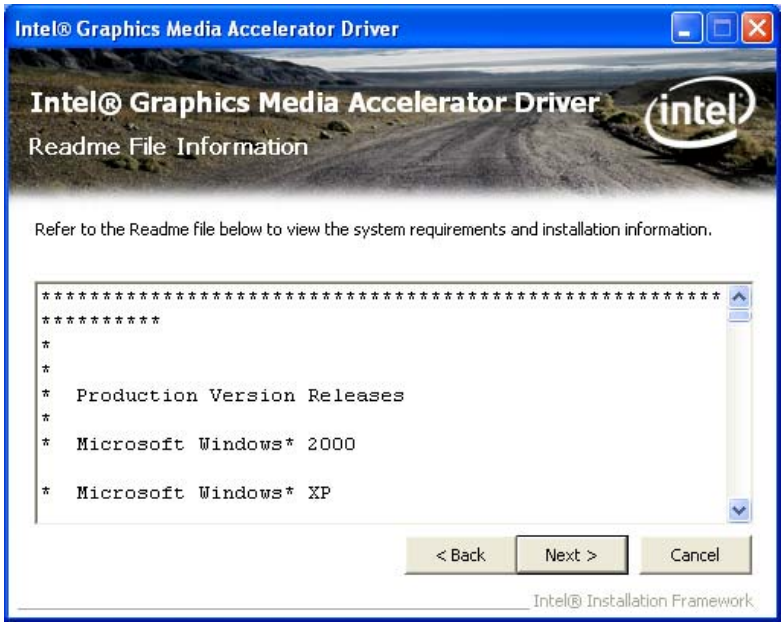

Figure 6-11: Graphics Driver Read Me File

Step 14: **Setup Operations** are performed as shown in **Figure 6-12**.

Step 15: Once the **Setup Operations** are complete, click **Next** to continue.

Figure 6-12: Graphics Driver Setup Operations

Step 16: The **Finish** screen in **Figure 6-13** appears.

Step 17: Select "**Yes, I want to restart this computer now**" and click **Finish**.

Figure 6-13: Graphics Driver Installation Finish Screen

6.5 LAN Driver Installation

To install the LAN driver, please do the following.

Step 1: Access the driver list. (See **Section 6.2**)

Step 2: Click "**LAN**" and select the **Realtek** folder

Step 3: Select the folder which corresponds to the operating system.

Step 4: Double click the setup file.

Step 5: The **Welcome** screen in **Figure 6-14** appears.

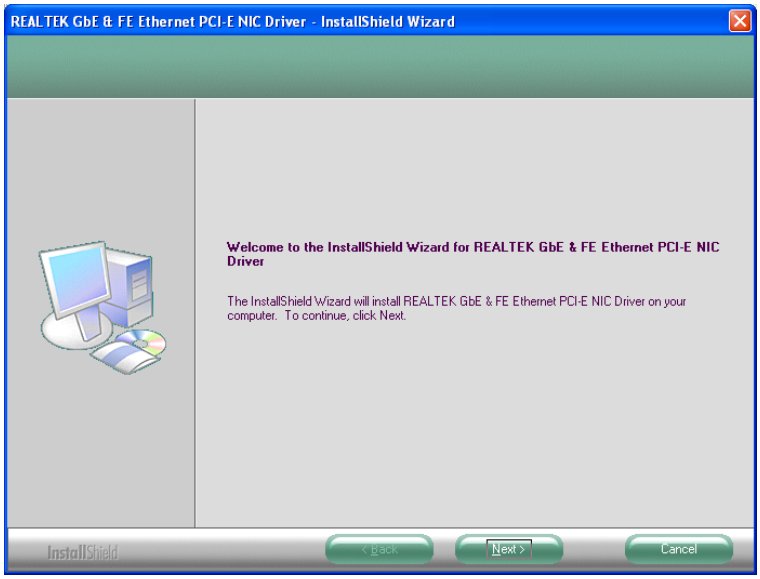

Figure 6-14: LAN Driver Welcome Screen

Step 6: Click **Next** to continue.

Step 7: The **Ready to Install** screen in **Figure 6-15** appears.

Step 8: Click **Next** to proceed with the installation.

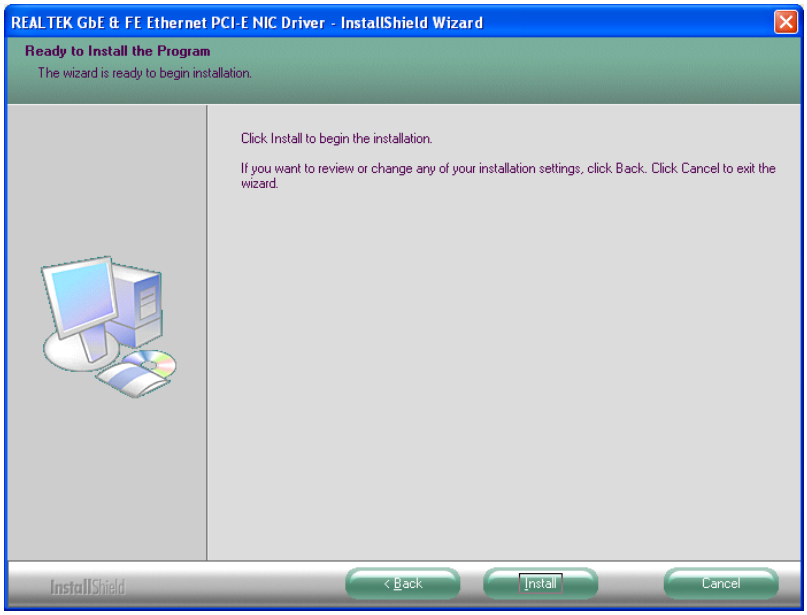

Figure 6-15: LAN Driver Welcome Screen

Step 9: The program begins to install.

Step 10: The installation progress can be monitored in the progress bar shown in **Figure 6-16**.

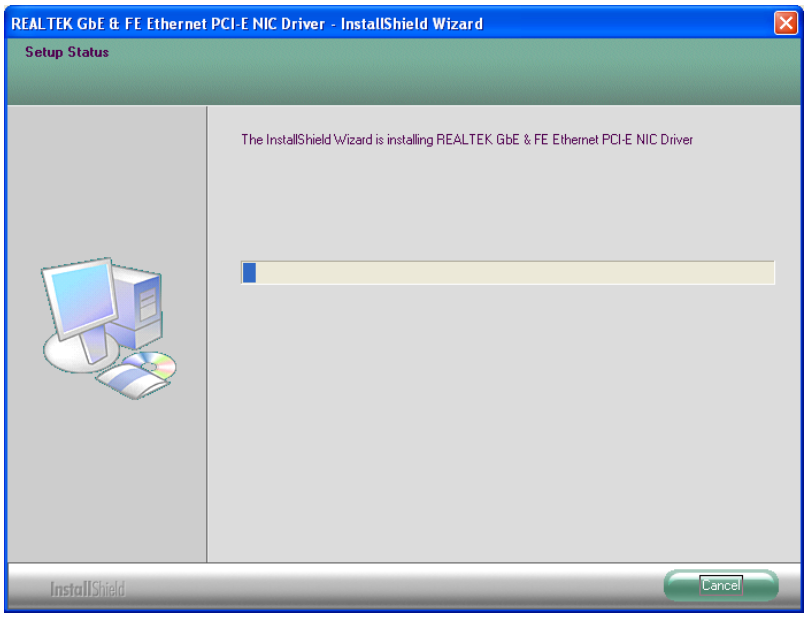

Figure 6-16: LAN Driver Installation

Step 11: When the driver installation is complete, the screen in **Figure 6-17** appears.

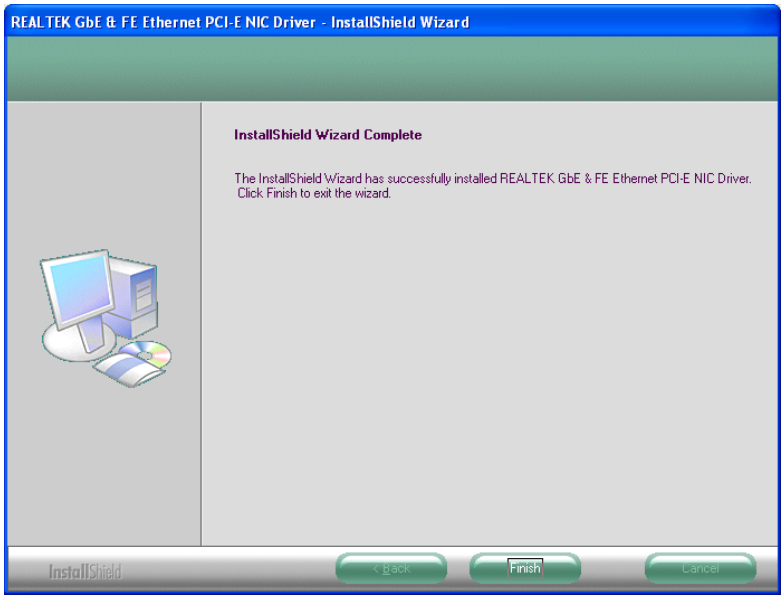

Figure 6-17: LAN Driver Installation Complete

6.6 Touchscreen Driver Installation

To install the touch panel software driver, please follow the steps below.

Step 1: Access the driver list. (See **Section 6.2**)

Step 2: Click "**Touch Screen**."

Step 3: Locate the setup file and double click on it.

Step 4: A **Welcome Screen** appears (**Figure 6-18**).

Step 5: Click **NEXT** to continue.

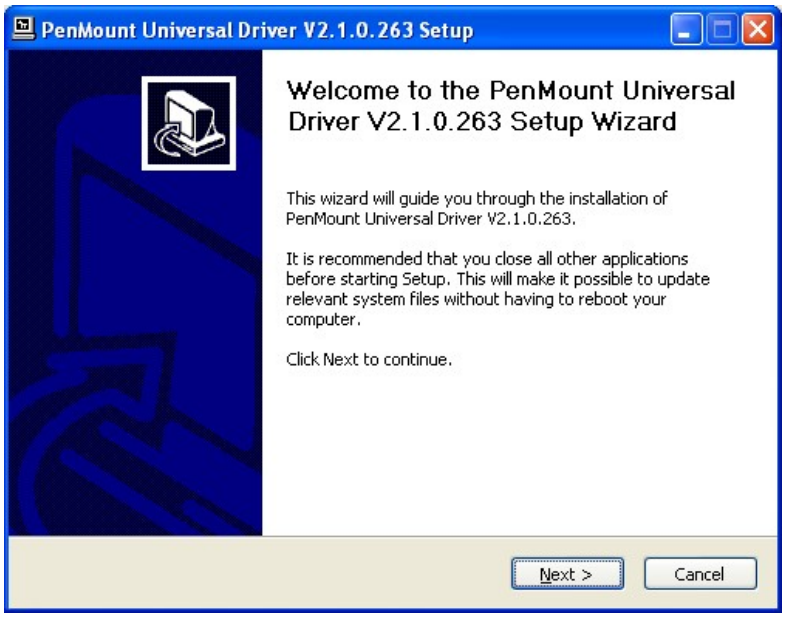

Figure 6-18: Touchscreen Driver Welcome Screen

Step 6: The **License Agreement** shown in **Figure 6-19** appears.

Step 7: Click **I AGREE** to accept and continue.

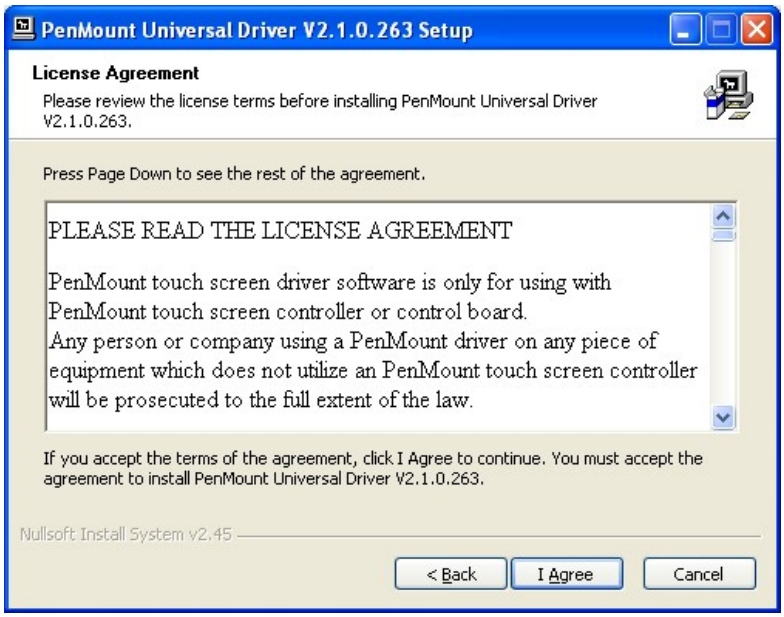

Figure 6-19: Touchscreen Driver License Agreement

Step 8: Browse for an install location or use the one suggested (**Figure 6-20**).

Step 9: Click **INSTALL** to continue.

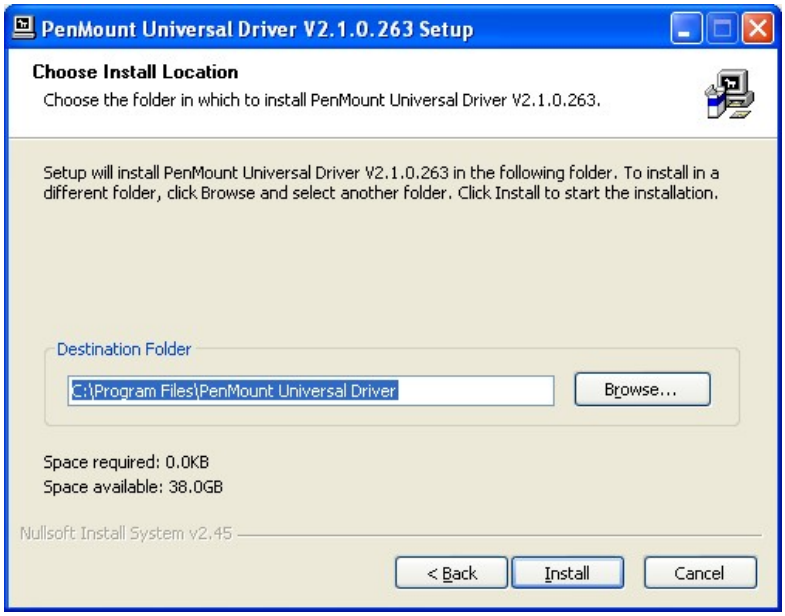

Figure 6-20: Touchscreen Driver Choose Install Location

Step 10: The **Install** screen appears and displays the progress of the installation (**Figure 6-21**).

Step 11: Click **NEXT** to continue.

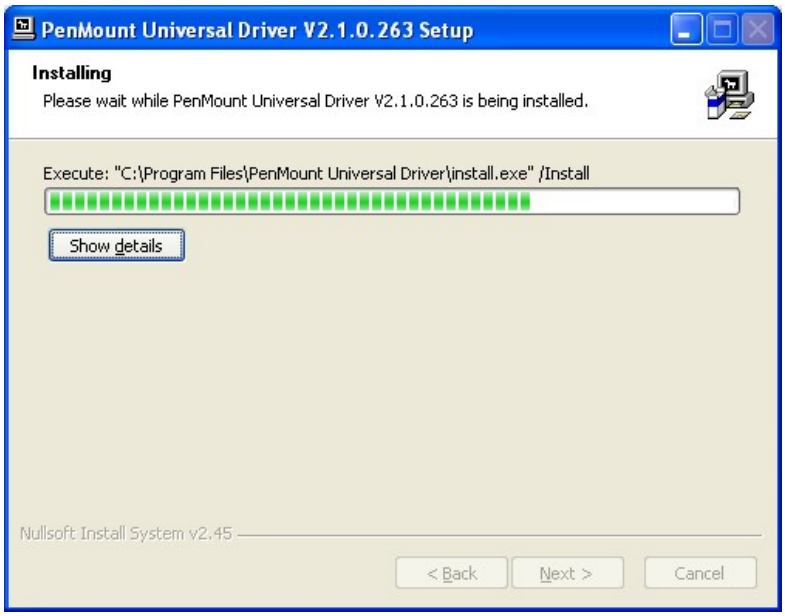

Figure 6-21: Touchscreen Driver Installation Screen

Step 12: When the installation is complete, click **FINISH** to exit setup. (**Figure 6-22)**.

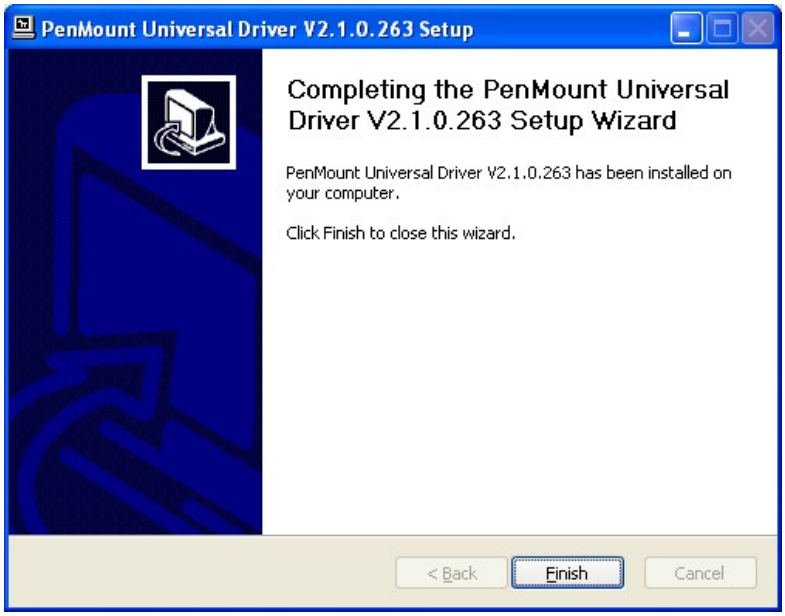

Figure 6-22: Touchscreen Driver Update Complete

6.6.1 Calibrating the Touchscreen

To calibrate the touchscreen cursor with the motion of the touchscreen pen (or finger), please follow the steps below:

Step 1: Make sure the touchscreen driver is properly installed.

Step 2: Locate the PenMount Monitor icon in the bottom right corner of the screen.

Figure 6-23: PenMount Monitor Icon

Step 3: Click the icon. A pop up menu appears. See **Figure 6-24**.

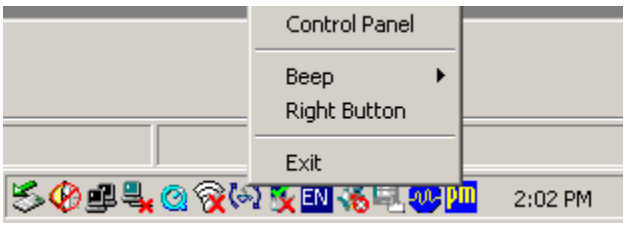

Figure 6-24: PenMount Monitor Popup Menu

Step 4: Click Control Panel in the pop up menu shown in **Figure 6-24.**

Step 5: The configuration screen in **Figure 6-25** appears.

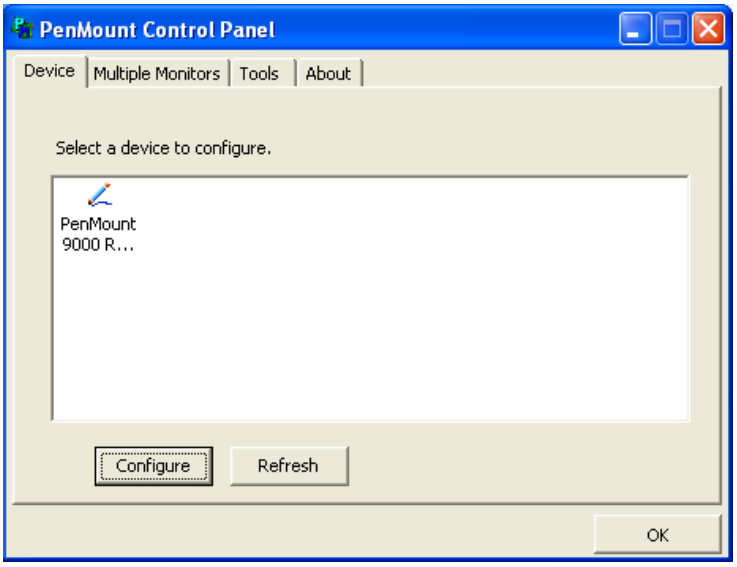

Figure 6-25: Configuration Screen

Step 6: Double click the PenMount 9000 icon as shown in **Figure 6-25**.

Step 7: The calibration initiation screen in **Figure 6-26** appears.

Step 8: Select the **Standard Calibration** button as shown in **Figure 6-26**.

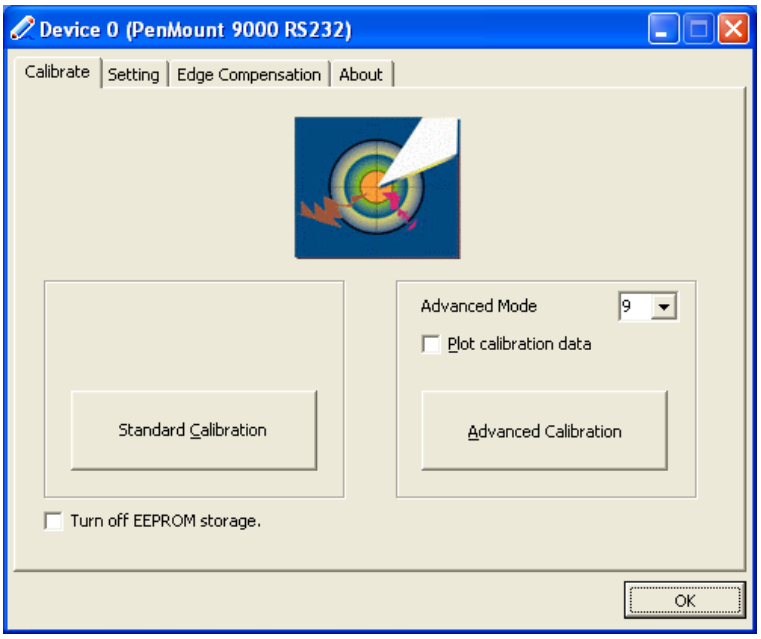

Figure 6-26: Calibration Initiation Screen

Step 9: The calibration screen in is shown. See **Figure 6-27**.

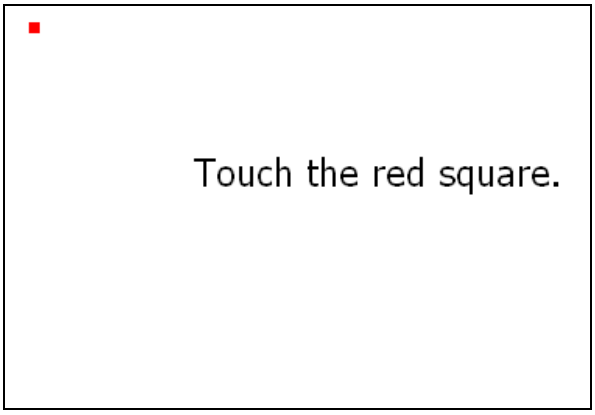

Figure 6-27: Calibration Screen

Step 10: Follow the instructions. The user is asked touch the screen at five specified points after which the screen is calibrated.

6.7 USB 3.0 Driver Installation

To install the USB 3.0 driver, please follow the steps below.

Step 1: Access the driver list. (See **Section 6.2**)

Step 2: Click "**USB 3.0**".

Step 3: Locate the setup file and double click on it.

Step 4: A **Welcome Screen** appears (**Figure 6-28**).

Step 5: Click **NEXT** to continue.

Figure 6-28: USB 3.0 Driver Welcome Screen

Step 6: The **License Agreement** shown in **Figure 6-29** appears.

Step 7: Click "**I accept the terms in the license agreement**" to accept and continue.

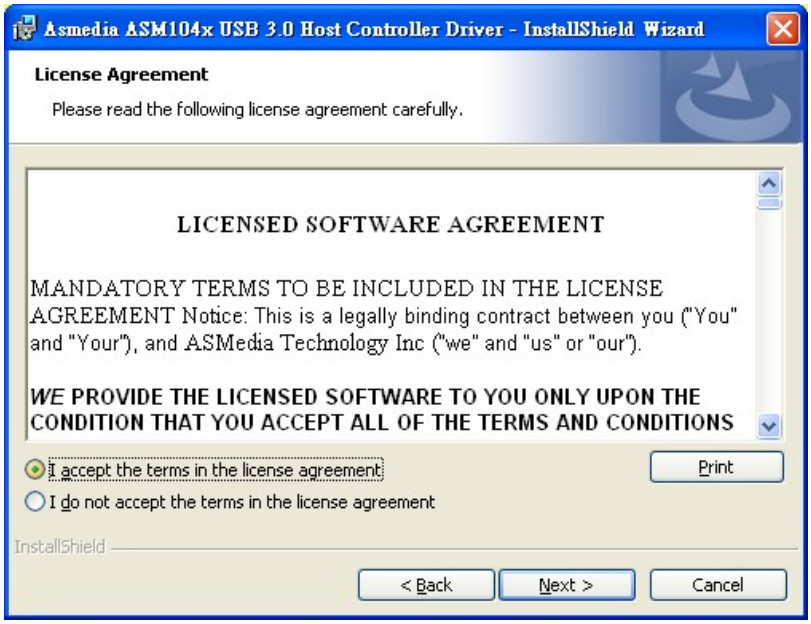

Figure 6-29: USB 3.0 Driver License Agreement

Step 8: The **Install** screen appears and displays the progress of the installation (**Figure 6-30**).

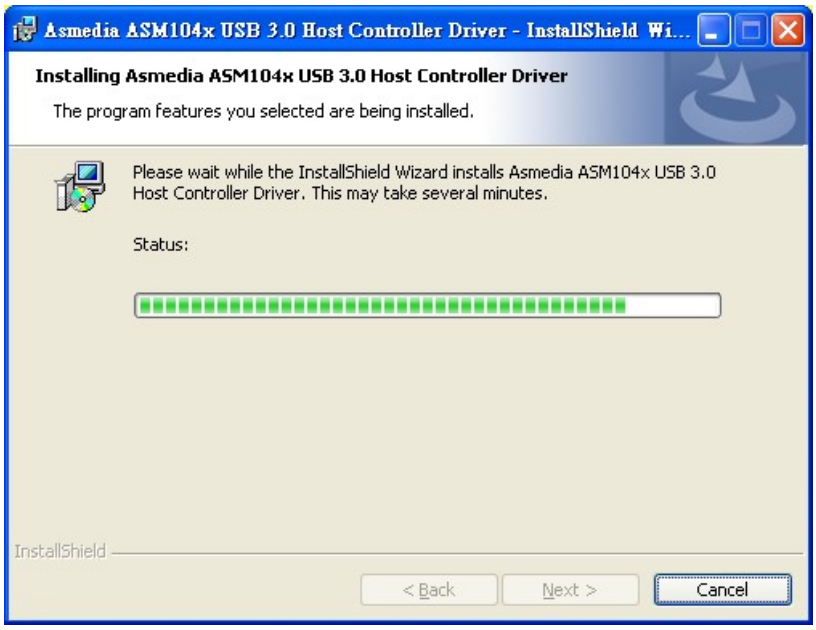

Figure 6-30: USB 3.0 Driver Installation Screen

Step 9: When the installation is complete, click **FINISH** to exit setup. (**Figure 6-31)**.

Figure 6-31: USB 3.0 Driver Update Complete

Appendix

A

BIOS Configuration Options

A.1 BIOS Configuration Options

Below is a list of BIOS configuration options described in **Chapter 5**.

Appendix

C

Safety Precautions

WARNING:

The precautions outlined in this chapter should be strictly followed. Failure to follow these precautions may result in permanent damage to the EP series.

B.1 Safety Precautions

Please follow the safety precautions outlined in the sections that follow:

B.1.1 General Safety Precautions

Please ensure the following safety precautions are adhered to at all times.

- ***Follow the electrostatic precautions*** outlined below whenever the EP series is opened.
- ***Make sure the power is turned off and the power cord is disconnected*** whenever the EP series is being installed, moved or modified.
- ***Do not apply voltage levels that exceed the specified voltage range***. Doing so may cause fire and/or an electrical shock.
- ***Electric shocks can occur*** if the EP series chassis is opened when the EP series is running.
- ***Do not drop or insert any objects*** into the ventilation openings of the EP series.
- ***If considerable amounts of dust, water, or fluids enter the EP series***, turn off the power supply immediately, unplug the power cord, and contact the EP series vendor.
- **DO NOT**:
  - Drop the EP series against a hard surface.
  - Strike or exert excessive force onto the LCD panel.
  - Touch any of the LCD panels with a sharp object
  - In a site where the ambient temperature exceeds the rated temperature

B.1.2 Anti-static Precautions

WARNING:

Failure to take ESD precautions during the installation of the EP series may result in permanent damage to the EP series and severe injury to the user.

Electrostatic discharge (ESD) can cause serious damage to electronic components, including the EP series. Dry climates are especially susceptible to ESD. It is therefore critical that whenever the EP series is opened and any of the electrical components are handled, the following anti-static precautions are strictly adhered to.

- ***Wear an anti-static wristband***: Wearing a simple anti-static wristband can help to prevent ESD from damaging any electrical component.
- ***Self-grounding***: Before handling any electrical component, touch any grounded conducting material. During the time the electrical component is handled, frequently touch any conducting materials that are connected to the ground.
- ***Use an anti-static pad***: When configuring or working with an electrical component, place it on an anti-static pad. This reduces the possibility of ESD damage.
- ***Only handle the edges of the electrical component***: When handling the electrical component, hold the electrical component by its edges.

B.1.3 Product Disposal

CAUTION:

Risk of explosion if battery is replaced by and incorrect type. Only certified engineers should replace the on-board battery.

Dispose of used batteries according to instructions and local regulations.

- Outside the European Union - If you wish to dispose of used electrical and electronic products outside the European Union, please contact your local authority so as to comply with the correct disposal method.
- Within the European Union:

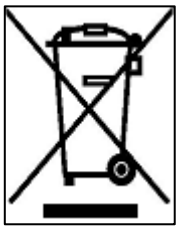

EU-wide legislation, as implemented in each Member State, requires that waste electrical and electronic products carrying the mark (left) must be disposed of separately from normal household waste. This includes monitors and electrical accessories, such as signal cables or power cords. When you need to dispose of your display products, please follow the guidance of your local authority, or ask the shop where you purchased the product. The mark on electrical and electronic products only applies to the current European Union Member States.

Please follow the national guidelines for electrical and electronic product disposal.

B.2 Maintenance and Cleaning Precautions

When maintaining or cleaning the EP series, please follow the guidelines below.

B.2.1 Maintenance and Cleaning

Prior to cleaning any part or component of the EP series, please read the details below.

- Except for the LCD panel, never spray or squirt liquids directly onto any other components. To clean the LCD panel, gently wipe it with a piece of soft dry cloth or a slightly moistened cloth.
- The interior of the EP series does not require cleaning. Keep fluids away from the EP series interior.
- Be cautious of all small removable components when vacuuming the EP series.
- Turn the EP series off before cleaning the EP series.
- Never drop any objects or liquids through the openings of the EP series.
- Be cautious of any possible allergic reactions to solvents or chemicals used when cleaning the EP series.
- Avoid eating, drinking and smoking within vicinity of the EP series.

B.2.2 Cleaning Tools

Some components in the EP series may only be cleaned using a product specifically designed for the purpose. In such case, the product will be explicitly mentioned in the cleaning tips. Below is a list of items to use when cleaning the EP series.

- ***Cloth*** – Although paper towels or tissues can be used, a soft, clean piece of cloth is recommended when cleaning the EP series.
- ***Water or rubbing alcohol*** – A cloth moistened with water or rubbing alcohol can be used to clean the EP series.
- ***Using solvents*** – The use of solvents is not recommended when cleaning the EP series as they may damage the plastic parts.
- ***Vacuum cleaner*** – Using a vacuum specifically designed for computers is one of the best methods of cleaning the EP series. Dust and dirt can restrict the airflow in the EP series and cause its circuitry to corrode.
- ***Cotton swabs*** - Cotton swaps moistened with rubbing alcohol or water are excellent tools for wiping hard to reach areas.
- **Foam swabs** - Whenever possible, it is best to use lint free swabs such as foam swabs for cleaning.

Appendix

D

Watchdog Timer

NOTE:

The following discussion applies to DOS environment. IEI support is contacted or the IEI website visited for specific drivers for more sophisticated operating systems, e.g., Windows and Linux.

The Watchdog Timer is provided to ensure that standalone systems can always recover from catastrophic conditions that cause the CPU to crash. This condition may have occurred by external EMI or a software bug. When the CPU stops working correctly, Watchdog Timer either performs a hardware reset (cold boot) or a Non-Maskable Interrupt (NMI) to bring the system back to a known state.

A BIOS function call (INT 15H) is used to control the Watchdog Timer:

INT 15H:

AH – 6FH Sub-function:	
AL – 2:	Sets the Watchdog Timer's period.
BL:	Time-out value (Its unit-second is dependent on the item "Watchdog Timer unit select" in CMOS setup).

Table C-1: AH-6FH Sub-function

Call sub-function 2 to set the time-out period of Watchdog Timer first. If the time-out value is not zero, the Watchdog Timer starts counting down. While the timer value reaches zero, the system resets. To ensure that this reset condition does not occur, calling sub-function 2 must periodically refresh the Watchdog Timer. However, the Watchdog timer is disabled if the time-out value is set to zero.

A tolerance of at least 10% must be maintained to avoid unknown routines within the operating system (DOS), such as disk I/O that can be very time-consuming.

NOTE:

When exiting a program it is necessary to disable the Watchdog Timer, otherwise the system resets.

Example program:

```
; INITIAL TIMER PERIOD COUNTER
;
W_LOOP:

        MOV     AX, 6F02H       ;setting the time-out value
        MOV     BX, 05          ;time-out value is 5 seconds
        INT      15H
 ;
; ADD THE APPLICATION PROGRAM HERE
;
        CMP     EXIT_AP, 1      ;is the application over?
        JNE      W_LOOP     ;No, restart the application

        MOV    AX, 6F02H     ;disable Watchdog Timer
        MOV    BX, 0         ;
        INT      15H
;
; EXIT ;
```

Appendix

E

Hazardous Materials Disclosure

D.1 Hazardous Material Disclosure Table for IPB Products Certified as RoHS Compliant Under 2002/95/EC Without Mercury

The details provided in this appendix are to ensure that the product is compliant with the Peoples Republic of China (China) RoHS standards. The table below acknowledges the presences of small quantities of certain materials in the product, and is applicable to China RoHS only.

A label will be placed on each product to indicate the estimated “Environmentally Friendly Use Period” (EFUP). This is an estimate of the number of years that these substances would “not leak out or undergo abrupt change.” This product may contain replaceable sub-assemblies/components which have a shorter EFUP such as batteries and lamps. These components will be separately marked.

Please refer to the table on the next page.

Part Name	Toxic or Hazardous Substances and Elements					
	Lead (Pb)	Mercury (Hg)	Cadmium (Cd)	Hexavalent Chromium (CR(VI))	Polybrominated Biphenyls (PBB)	Polybrominated Diphenyl Ethers (PBDE)
Housing	O	O	O	O	O	O
Display	O	O	O	O	O	O
Printed Circuit Board	O	O	O	O	O	O
Metal Fasteners	O	O	O	O	O	O
Cable Assembly	O	O	O	O	O	O
Fan Assembly	O	O	O	O	O	O
Power Supply Assemblies	O	O	O	O	O	O
Battery	O	O	O	O	O	O

O: This toxic or hazardous substance is contained in all of the homogeneous materials for the part is below the limit requirement in SJ/T11363-2006

X: This toxic or hazardous substance is contained in at least one of the homogeneous materials for this part is above the limit requirement in SJ/T11363-2006

此附件旨在确保本产品符合中国 RoHS 标准。以下表格标示此产品中某有毒物质的含量符合中国 RoHS 标准规定的限量要求。

本产品上会附有"环境友好使用期限"的标签，此期限是估算这些物质"不会有泄漏或突变"的年限。本产品可能包含有较短的环境友好使用期限的可替换元件，像是电池或灯管，这些元件将会单独标示出来。

部件名称	有毒有害物质或元素					
	铅 (Pb)	汞 (Hg)	镉 (Cd)	六价铬 (CR(VI))	多溴联苯 (PBB)	多溴二苯醚 (PBDE)
壳体	O	O	O	O	O	O
显示	O	O	O	O	O	O
印刷电路板	O	O	O	O	O	O
金属螺帽	O	O	O	O	O	O
电缆组装	O	O	O	O	O	O
风扇组装	O	O	O	O	O	O
电力供应组装	O	O	O	O	O	O
电池	O	O	O	O	O	O

O: 表示该有毒有害物质在该部件所有物质材料中的含量均在 SJ/T11363-2006 标准规定的限量要求以下。

X: 表示该有毒有害物质至少在该部件的某一均质材料中的含量超出 SJ/T11363-2006 标准规定的限量要求。