威強電工業電腦 Integration Corp.

ICE-MTL-T6B

COM-Express Type 6 Basic size Module. Intel® Core™ Ultra Processor Series 1 (Meteor Lake-U platform) processor.

Quick Installation Guide

Version 1.00 August, 2026

Features

- Powered by Intel® Core™ Ultra (Meteor Lake-H) mobile processors (e.g., Ultra 7-155H / Ultra 5-125H).
- Intel® New Xe LPG Graphics; supports 4 independent displays (HDMI 2.0 & USB4) up to 4K @ 60 Hz.
- Supports up to 96GB DDR5 5600MHz via 2 x 262 pin SO-DIMM slots.
- High-speed one PCIe x8 and four PCIe x4 signals to the baseboard.
- Onboard NVMe SSD (optional) and two SATA 6Gb/s interfaces.
- One PCIe 2.5 GbE Ethernet port (Intel® i226-V controller).

Packing List

- 1 x ICE-MTL-T6B Module
- 1 x Fan Module
- 1 x Heatsink

Jumpers & Connectors

ME_FLASH1: Clear CMOS jumper	
STATUS	**DESCRIPTION**
1	Pull high 2.2Kohm
2	HDA_CODEC_SDO

JBIOS1: BIOS update Connector	
PIN NO.	**DESCRIPTION**
1	+3.3V_SPI_CON
2	SPI_CS0_R_N
3	SPI0_MISO_FLASH0_R
4	SPI0_CLK_FLASH0_R
5	SPI0_MOSI_FLASH0_R
6	GND
G1	GND
G2	GND

J_SMB1: Flash EC ROM Connector	
PIN NO.	**DESCRIPTION**
1	GND
2	SMB_DATA
3	SMB_CLK
4	+5V

CPU_FAN1: CPU Fan Connector	
PIN NO.	**DESCRIPTION**
1	EC_FANCTL1
2	EC_FANIN1
3	+V12S
4	GND

Get more information:

ICE-MTL-T6B

IEI Resource Download Center

Dimensions (Unit: mm)

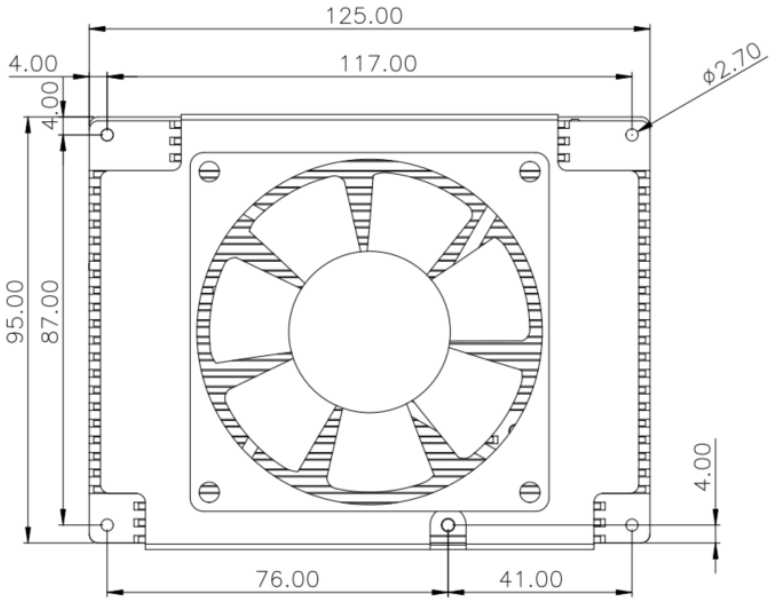

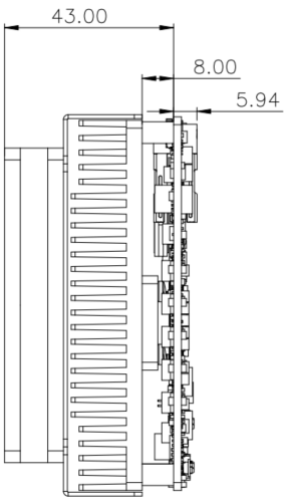

Safety Instructions



Warning! Read the user manual before connecting the system to the power source.

Warning! To prevent the system from overheating, do not operate it in an area that exceeds the maximum operating temperature described in the user manual.

Warning! Ultimate disposal of this product should be handled according to all national laws and regulations.

Support



IEI Support URL
http://new.ieiworld.com/tw/online_support_form

Compliance



This equipment has been tested and found to comply with specifications for CE marking. If the user modifies and/or installs other devices in the equipment, the CE conformity declaration may no longer apply.



This equipment complies with Part 15 of the FCC Rules. Operation is subject to the following two conditions:

- This device may not cause harmful interference, and
- This device must accept any interference received, including interference that may cause undesired operation.

This equipment has been tested and found to comply with the limits for a Class A digital device, pursuant to part 15 of the FCC Rules. These limits are designed to provide reasonable protection against harmful interference when the equipment is operated in a commercial environment. This equipment generates, uses, and can radiate radio frequency energy and, if not installed and used in accordance with the instruction manual, may cause harmful interference to radio communications. Operation of this equipment in a residential area is likely to cause harmful interference in which case the user will be required to correct the interference at his own expense.



According to the requirement of the WEEE legislation, the following user information is provided to customers for all branded IEI Electronics products subject to the WEEE directive.
This symbol on the product or on its packaging indicates that this product must not be disposed of with your other household waste. Instead, it is your responsibility to dispose of your waste equipment by handing it over to a designated collection point for the recycling of waste electrical and electronic equipment. The separate collection and recycling of your waste equipment at the time of disposal will help to conserve natural resources and ensure that it is recycled in a manner that protects human health and the environment. For more information about where you can drop off your waste equipment for recycling, please contact your local city office, your household waste disposal service or the shop where you purchased the product.

Headquarters
IEI Integration Corp.
No. 29, ZhongXing Rd., Xizhi Dist.,
New Taipei City 221, Taiwan
TEL: +886-2-8691-6798/+886-2-2690-2098
FAX: +886-2-6616-0028
sales@ieiworld.com
www.ieiworld.com

America
IEI Technology USA Corp.
138 University Parkway, Pomona,
CA 91768, USA
Tel:+1-909-595-2819
Fax:+1-909-595-2816
sales@usa.ieiworld.com
usa.ieiworld.com

China
IEI Integration (Shanghai) Corp.
No. 515, Shen Fu Rd., Xin Zhuang Industrial Develop Zone,
Shanghai, 201108, China
Tel:+86-21-3116-7799
Fax:+86-21-3462-7797
sales@ieiworld.com.cn
www.ieiworld.com.cn

Copyright ©2026 IEI Integration Corp. All rights reserved.