AFL3 Apollo Lake with PoE

Intelligent PoE Management System

Features

- W7” light industrial interactive panel PC
- 12V DC input with lockable DC jack
- Selectable AT/ATX power mode
- Built-in speakers
- Support PoE PD IEEE803.2 af/at
- IP65 compliant front panel
- Touch screen with anti-UV / anti-glare coating
- Support Auto Flow Control over RS-485

Intel® Apollo lake | Fanless | PoE | Touchscreen | Anti-glare Coating

Specifications

Model		AFL3-W07A-AL	AFL3-W07A-AL2
LCD	Size	7”	
	Resolution	1024 x 600 (16:9)	
	Brightness (cd/m²)	500	
	Contrast Ratio	700:1	
	Viewing Angle (H-V)	150 / 145	
	Backlight MTBF	20000	
Touch	Touch Screen	PCAP with USB interface (anti-UV/AG coating)	
	Touch Controller	EETI 80H60	
Mainboard	CPU	Intel® Celeron N3350 (2M Cache, up to 2.4 GHz) TDP 6W	
	RAM	one 204-pin 1866MHz DDR3L DIMMs support up to 8GB	
	Ethernet	LAN1: Intel® I211 + LAN2: Intel® I211	LAN1: Intel® I211
	Audio Codec	Realtek ALC 888S	
Storage		1 x M.2 B+M key 2242 slot (USB/SATA signal)	
I/O Ports & Switch		2 x GbE LAN 2 x USB 3.2 Gen 1 (5Gb/s) 2 x USB 2.0 1 x 12V DC Jack 1 x Power Button 1 x Reset button 1 x Clear CMOS button 1 x AT/ATX switch	1 x GbE LAN 2 x USB 3.2 Gen1 (5Gb/s) 1 x RS232/422/485 (by DB9) 1 x HDMI 1 x 12 DC Jack 1 x Power Button 1 x Reset button 1 x Clear CMOS button 1 x AT/ATX switch
PoE Support		On board PoE at	
Audio		AMP 2W (internal speaker)	
Wireless & Bluetooth		IEEE 802.11 a/b/g/n/ac, Bluetooth V4.1 M.2 slot A+E key 2230 slot (PCIe/USB signal)	
Physical	Construction Front Panel	PC + ABS Plastic	
	Mounting	Panel, Wall, Stand and Arm VESA 75mm x 75mm	
	Color	Black C	
	Dimensions (W x H x D) (mm)	191 x 127 x 43	
	Cut-out Dimensions (W x H)	182 x 111	
	Net/Gross Weight (kgs)	0.73/1.81	
Environment	Operating Temperature (°C) (Ambient with air flow)	-20˚C ~ 50˚C	
	Storage Temperature (°C)	-20˚C ~ 60˚C	
	Humidity	10% to 95% (non-condensing)	
	IP Level	IP 65 compliant front panel	
	Safety&EMC	CE / FCC class A	
	Thermal Solution	Fanless	
Power	Power Requirement	12V/3A	
ErP		ErP 2009/125/EC	
Supported OS		Microsoft Windows® 10, Linux	

AFL3 Apollo Lake with PoE

Intelligent PoE Management System

Features

- W10" ~ W15.6" light industrial interactive panel PC
- 9 V ~ 30 V wide range DC input with lockable DC jack
- Selectable AT/ATX power mode
- Built-in speakers
- Support PoE PD IEEE803.2 af/at/bt
- IP64/IP65 compliant front panel
- Touch screen wth anti-UV / anti-glare coating
- Support Auto Flow Control over RS-485

Intel® Apollo lake | Fanless | PoE | Touchscreen | Anti-glare Coating | 9V~30V DC

Specifications

Model		AFL3-W10A-AL	AFL3-12A-AL	AFL3-W15A-AL
LCD	Size	10.1"	12.1"	15.6"
	Resolution	1280 x 800 (16:10)	1024 x 768 (4:3)	1366 x 768 (16:9)
	Brightness (cd/m²)	350	500	300
	Contrast Ratio	800:1	700:1	500:1
	Viewing Angle (H-V)	170 / 170	160 / 160	170 / 160
	Backlight MTBF	15000	50000	50000
Touch	Touch Screen	PCAP with USB interface (anti-UV/anti-glare coating)		
	Touch Controller	EXC3146	EXC3146	EXC3160
Mainboard	CPU	Apollo lake Intel® Celeron® Processor J3455 (2M Cache, up to 2.3 GHz) TDP 10W		
	RAM	one 204-pin 1866MHz DDR3L DIMMs support up to 8GB		
	Ethernet	LAN1: Intel® I210 + LAN2: Intel® I210		
	Audio Codec	Realtek ALC 888S		
Storage		1 x M.2 B+M key 2242 slot (USB/SATA signal)	*1 x 2.5" SATA 3Gb/s HDD bay (optional one of the two) 1 x M.2 B+M key 2242 slot (USB/SATA signal)	
I/O Ports & Switch		1 x RS-232/422/485 by RJ45 (Support Auto Flow Control over RS-485) 1 x RS-232 by DP9 2 x GbE LAN 2 x USB 3.2 Gen 1 (5Gb/s) 2 x USB 2.0 1 x HDMI output 1 x 9V~30V DC Jack 1 x Power Button 1 x Line out 1 x Reset button 1 x Clear CMOS button 1 x AT/ATX switch		
PoE Support		Yes (option single channel)		
Audio		AMP 2W + 2W	AMP 3W + 3W (internal speaker)	
Camera / Microphone		2-megapixel with low light function, digital microphone		
Wireless & Bluetooth		IEEE 802.11 a/b/g/n/ac, Bluetooth V4.1 M.2 slot A+E key 2230 slot (PCIe/USB signal)		
Physical	Construction Front Panel	PC + ABS Plastic		
	Mounting	Panel, Wall, Stand and Arm VESA 75mm x 75mm	Panel, Wall, Stand and Arm VESA 75mm x 75mm, 100mm x 100mm	
	Color	Black C		
	Dimensions (W x H x D)(mm)	262 x 181 x 42	304 x 243 x 44	396 x 250 x 53
	Cut-out Dimensions (W x H)	236 x 149	243 x 205	273 x 226
	Net/Gross Weight (kgs)	1.06/2.58	1.92/3.95	3.3/5.6
Environment	Operating Temperature (°C) (Ambient with air flow)	-20˚C ~ 50˚C		
	Storage Temperature (°C)	-20˚C ~ 60˚C		
	Humidity	10% to 95% (non-condensing)		
	IP Level	IP 64 compliant front panel		
	Safety&EMC	CE / FCC class A		
	Thermal Solution	Fanless		
Power	Power Requirement	9 ~ 30V, 4~1, 2A	9 ~ 30V, 6.67~2A	9 ~ 30V, 6.67 ~ 2A
ErP		ErP 2009/125/EC		
Supported OS		Microsoft Windows® 10, Linux		

*the 2.5" HDD bay must be removed if one chooses to install the PoE PD module, and vice versa

Ordering Information

Part No.	Description
AFL3-W07A-AL-N1/P/PC/4G-R11	7" 500cd/m2 1024x600 fanless Panel PC with Intel® Celeron® Processor N3350 (6W) on-board Processor , on-baord POE at, 1*4GB DDR3L , 802.11a/b/g/n/ac WiFi module, PCAP touch,R11
AFL3-W07A-AL2-N1/P/PC/4G-R10	7" 500cd/m² 1024 x 600 Panel PC with Intel® Celeron® Processor N3350 (6W) on-board Processor, w/COM, on-baord POE at, 1*4GB DDR3L, WiFi module, PCAP touch, R10
AFL3-W10A-AL-J2/P/PC/4G-R10	10.1" 350cd/m² 1280 x 800 Panel PC with Intel® Celeron® Processor J3455 (10W) on-board Processor, POE option, 1*4GB DDR3L, 802.11a/b/g/n/ac WiFi module, PCAP touch, 2M camera, microphone, R10
*AFL3-12A-AL-J2/P/PC/4G-R10	12.1"500 cd/m² 1024 x 768 Panel PC with Intel® Celeron® Processor J3455 (10W) on-board Processor, POE option, 1*4GB DDR3L, 802.11a/b/g/n/ac WiFi module, PCAP touch, 2M camera, microphone, R10
*AFL3-W15A-AL-J2/P/PC/4G-R10	Wide 15.6" 300 cd/m² 1366 x 768 Panel PC with Intel® Celeron® Processor J3455 (10W) on-board Processor, POE option, 1*4GB DDR3L, 802.11a/b/g/n/ac WiFi module, PCAP touch, 2M camera, microphone, R10
AFL3-PD-BT01-KIT01-R10	PoE PD IEEE802.3 af/at/bt module kit, only for AFL3-xxx-AL optional (W10A/12A/W15A), R10

*the 2.5" HDD bay must be removed if one chooses to install the PoE PD module, and vice versa

Options

Item	AFL3-W07A-AL	AFL3-W07A-AL2	AFL3-W10A-AL	AFL3-12A-AL	AFL3-W15A-AL
Panel Mounting Kit	AFL3PK-W07A-R11	AFL3PK-W07A-R11	AFL3PK-08A-R10	AFL3PK-08A-R10	AFL3PK-W15A-R10
Wall Mounting Kit	AFLWK-12	AFLWK-12	AFLWK-12	AFLWK-19B	AFLWK-19B
Rack Mounting Kit	AFL3RK-W07A-R11	AFL3RK-W07A-R11	AFL3RK-W10A-R10	-	AFL3RK-W15A-R11
Arm	ARM-11-RS/ARM-31-RS	ARM-11-RS/ARM-31-RS	ARM-11-RS/ARM-31-RS	ARM-11-RS/ARM-31-RS	ARM-11-RS/ARM-31-RS
Stand	STAND-A21-R10/STAND-210-R11/STAND-C12-R10				
V-Stand	VSTAND-A07-R1	VSTAND-A07-R1	VSTAND-A10-R11	VSTAND-A12-R11	
Barcode Scanner	N/A	N/A	AFL3-2D-R11	AFL3-2D-R11	AFL3-2D-R11
RFID Reader (13.56 MHz Mifare Type)	N/A	N/A	AFL3-MF-RFID-KIT02-R11	AFL3-MF-RFID-KIT02-R11	AFL3-MF-RFID-KIT02-R11
OS: Win 10 IOT Enterprise (64-bit)	AFL3-W07A-AL-W10E64-E-R10				
PoE PD module	N/A	N/A	AFL3-PD-BT01-KIT01-R10	AFL3-PD-BT01-KIT01-R10	AFL3-PD-BT01-KIT01-R10

Packing List

Item	Part No.	Q'ty	Remark
Setting kit	46003-002600-RS	2	
Round head machine screw	44003-020041-RS	2	M2*4 round head machine screw
	44003-020041-RS	4	M2*4 round head machine screw
Pan head machine screw	44403-040061-RS	4	M4*6 pan head machine screw
Fix holder	46003-009500-RS	2	
Power cord	32702-000400-200-RS	1	
Power adapter	63040-010036-210-RS	1	Vin:90~264VAC;36W, Vout:12VDC;Φ2.5/Φ5.5/lock (AFL3-W07A-AL / AFL3-W07A-AL2 / AFL3-W10A-AL)
	63040-010060-211-RS	1	Vin:90~264VAC;36W, Vout:12VDC;Φ2.5/Φ5.5/lock (AFL3-12A-AL / AFL3-W15A-AL)
RJ-45 to DB-9 COM port transfer cable	32005-004600-100-RS	1	300mm, 26AWG, (A) D-SUB 9 male, (B) RJ-45

AFL3-W07A-AL
Fully Integrated I/O

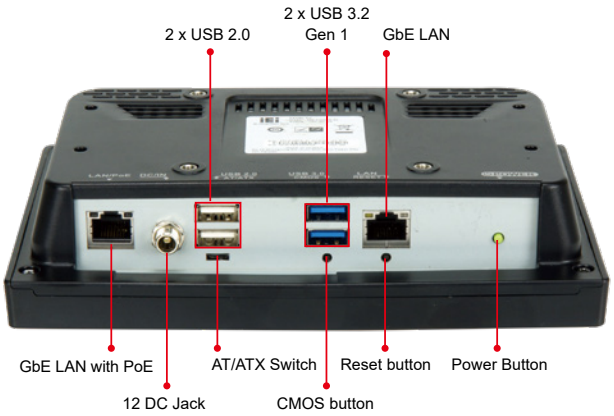

AFL3-W07A-AL2
Fully Integrated I/O

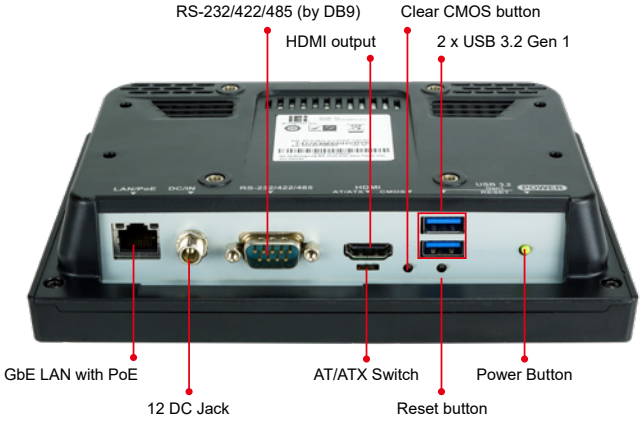

AFL3-W10A-AL
Fully Integrated I/O

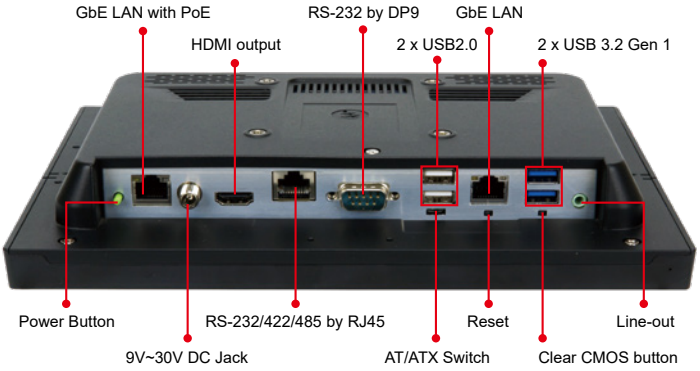

AFL3-12A-AL
Fully Integrated I/O

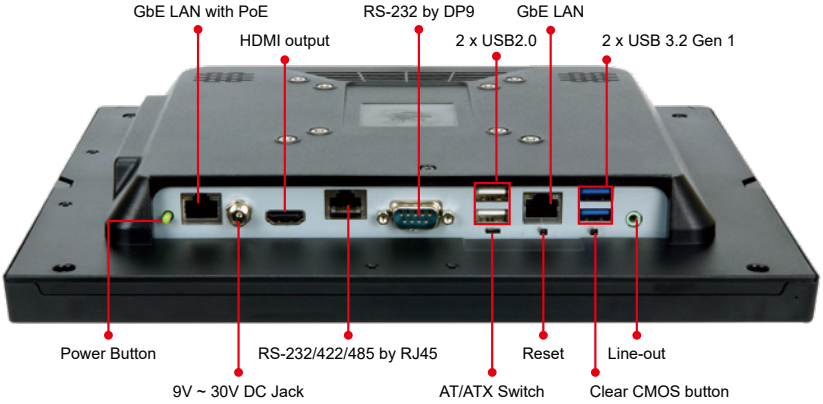

AFL3-W15A-AL
Fully Integrated I/O

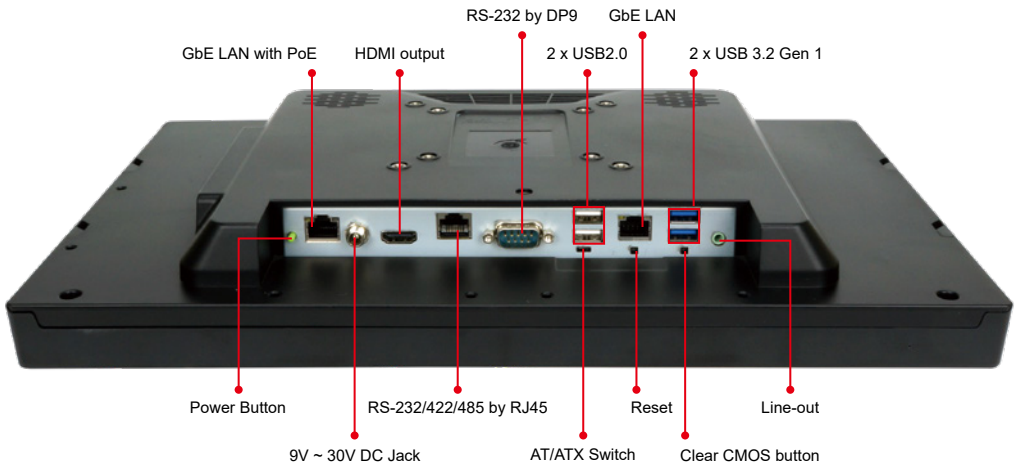

AFL3-W07A-AL Dimensions (Unit: mm)

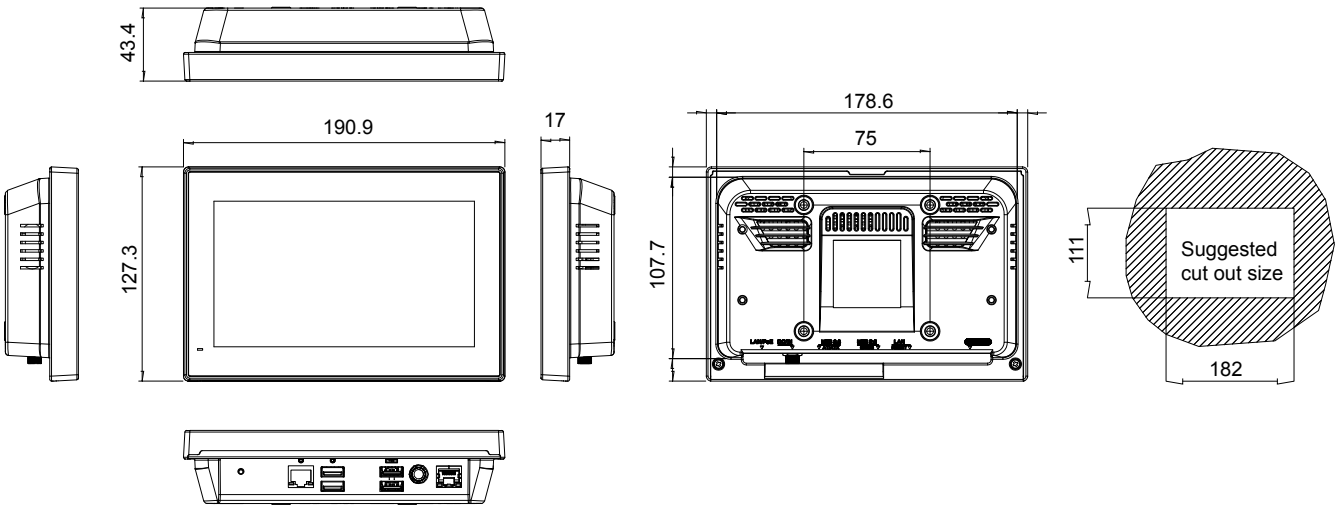

AFL3-W07A-AL2 Dimensions (Unit: mm)

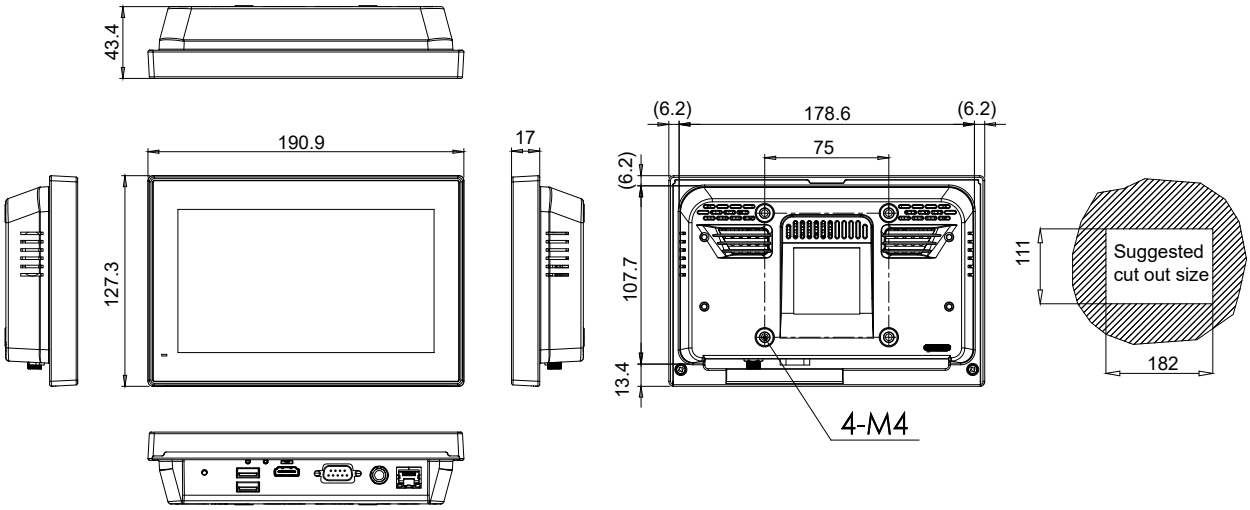

AFL3-W10A-AL Dimensions (Unit: mm)

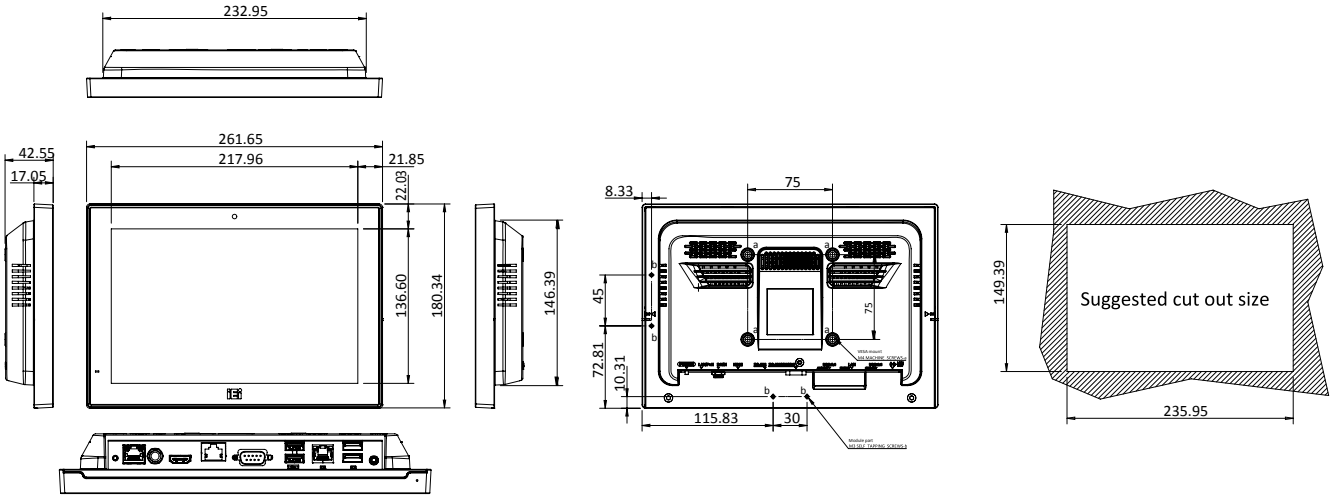

AFL3-12A-AL Dimensions (Unit: mm)

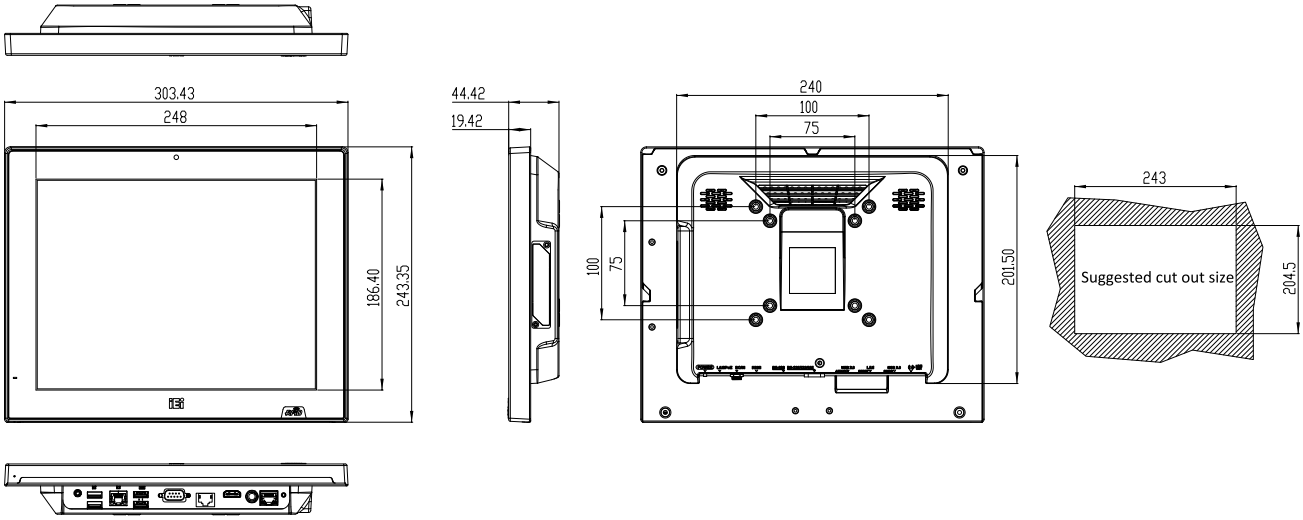
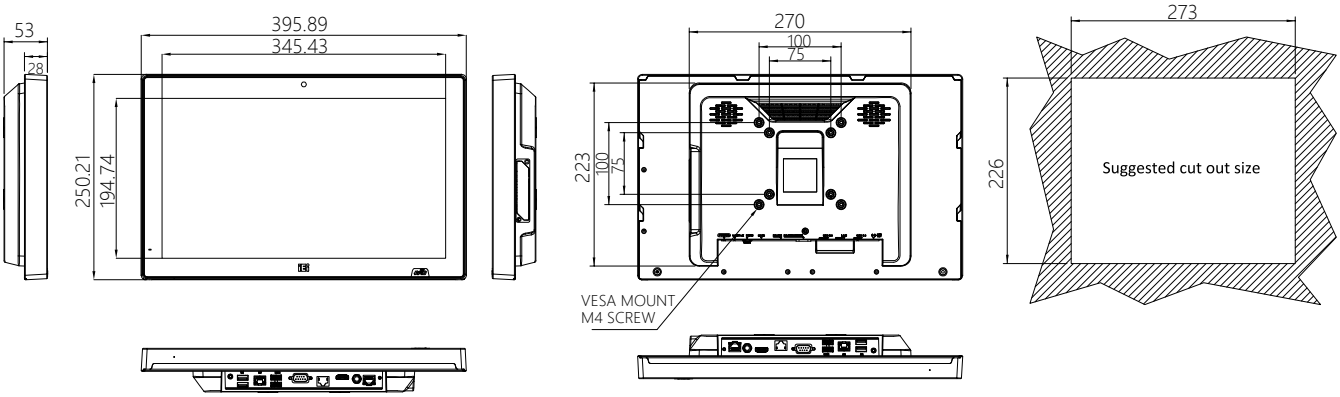
AFL3-W15A-AL Dimensions (Unit: mm)