PPC-F-Q370 Series

15”/15.6” AI Ready Panel PC Based on Intel® OpenVINO™ toolkit

Features

- 15”/15.6” Panel PC with 8th/9th Generation LGA 1151 Intel® Core™ i7/i5/i3 and Pentium® processor
- Four hot-swappable and accessible HDD drive bays, support RAID 0/1/5/10
- Two PCIe 3.0 by 4 and two PCIe 3.0 by 8 slots
- M.2 2280 PCIe Gen 3.0 x4 NVMe™ SSD support

Intel® Q370 | 10 Point Multi-touch | IP66 | 4x PCIe slots | 4x HDD Bay | SSD NVME

Specifications

Model		PPC-F15C-Q370	PPC-FW15C-Q370
TFT LCD	LCD Size	15”	15.6"
	Max. Resolution	1024x768	1366x768
	Brightness (cd/m²)	450	400
	Contrast Ratio	800:1	500:1
	LCD Color	16.2M	16.2M
	Viewing Angle (H/V)	160°/150°	170°/160°
	Backlight MTBF (Hrs)	70,000	50,000
Touch Screen		PCAP touch with 10-point multitouch, anti-glare coating	
Mainboard	CPU	8th/9th Generation Intel® Core™ i7/i5/i3 and Pentium® processor in the LGA 1151 package	
	Chipset	Intel® Q370 Chipset	
	Memory	2 x 288-pin 2666/2400 MHz dual-channel DDR4 unbuffered DIMM slot supporting up to 64GB	
	Graphics Engine	Intel® HD Graphics Gen 9 Engines with 16 low-power execution units, supports DX2015, OpenGL 5.X and OpenCL 2 x, ES 2.0	
	Ethernet	Intel® I211 & I219 controller	
Storage		(1) 4 x Accessible 2.5” SATA 6Gb/s HDD/SSD bay (RAID 0/1/5/10 support) with LED indicator (2) 1 x M.2 2280 PCIe Gen 3.0 x4 NVMe™ SSD socket	
I/O Ports and Switches		1 x HDMI output 2 x GbE LAN 6 x USB 3.2 Gen 1 (5Gb/s) Type-A 2 x RS-232 DB-9 type 1 x Mic in	1 x Line out 1 x AC power in Inlet Power button with power LED (power on=Blue) AT/ATX mode switch Reset button
Expansion Slots		2 x PCIe 3.0 by 8 (by 16 slot) 2 x PCIe 3.0 by 4 (maximum card size supported: 68 mm x 167 mm) 1 x NGFF M.2 (2230) A Key socket (support Wi-Fi) 1 x NGFF M.2 (3042) B Key socket (support WWAN wits SIM slot)	
Thermal Solution		Smart Fan	
Power Supply		AC input ATX power supply 1. 250W power supply - Input: 115VAC~230VAC, 50/60Hz - Output (max.): 3.3V@12A, 5V@14A, 12V@25A, -12V@0.3A,+5Vsb@3A 2. 350W power supply (Build to Order) - Input: 115VAC~264VAC, 50/60Hz - Output (max.): 3.3V@14A, 5V@16A, 12V@29A, -12V@0.3A,+5Vsb@3A -Efficiency: Full load (100%) 87%, Typical load (50%) 90%, Light load (20%) 87%	
Watchdog Timer		Software Programmable support 1~255 sec. system reset	
Construction	IP Rating	IP66-rated front panel	
	Chassis Construction	Metal Housing	
	Mounting	Rack/Panel Mount	
	Color	Front Bezel : Cyan-blue (PSM 296C), Others: Black C	
	Cut-out dimensions (LxDxH) (mm)	361.1 x 285.6	379.1 x 232.3
	Dimensions (LxDxH) (mm)	378.5 x 303 x 118	400.1 x 253.3 x 121
Environmental	Operating Temperature	-20°C ~ 50°C (with SSD and up to TDP 65W processor) -20°C ~ 40°C (with HDD or add-on cards without fan)	
	Storage Temperature	-30°C ~ 60°C	
	Operating Humidity	5% ~95%, non-condensing	
	Vibration	5~17Hz, 0.1 double amplitude displacement 17~640Hz 1.5G acceleration peak to peak	
	Shock	10G acceleration part to part (11ms)	
	Safety and EMC	CE & FCC Class A certified	

PPC-F-Q370 Series

17”/18.5” AI Ready Panel PC Based on Intel® OpenVINO™ toolkit

Features

- 17”/18.5" Panel PC with 8th/9th Generation LGA 1151 Intel® Core™ i7/i5/i3 and Pentium® processor
- Four hot-swappable and accessible HDD drive bays, support RAID 0/1/5/10
- Two PCIe 3.0 by 4 and two PCIe 3.0 by 8 slots
- M.2 2280 PCIe Gen 3.0 x4 NVMe™ SSD support

Intel® Q370 | 10 Point Multi-touch | IP66 | 4x PCIe slots | 4x HDD Bay | SSD NVME

Specifications

Model		PPC-F17C-Q370	PPC-FW19C-Q370
TFT LCD	LCD Size	17”	18.5"
	Max. Resolution	1280x1024	1366x768
	Brightness (cd/m²)	350	400
	Contrast Ratio	1000:1	
	LCD Color	16.7M	
	Viewing Angle (H/V)	170°/160°	
	Backlight MTBF (Hrs)	50,000	
Touch Screen		PCAP touch with 10-point multitouch, anti-glare coating	
Mainboard	CPU	8th/9th Generation Intel® Core™ i7/i5/i3 and Pentium® processor in the LGA 1151 package	
	Chipset	Intel® Q370 Chipset	
	Memory	2 x 288-pin 2666/2400 MHz dual-channel DDR4 unbuffered DIMM slot supporting up to 64GB	
	Graphics Engine	Intel® HD Graphics Gen 9 Engines with 16 low-power execution units, supports DX2015, OpenGL 5.X and OpenCL 2 x, ES 2.0	
	Ethernet	Intel® I211 & I219 controller	
Storage		(1) 4 x Accessible 2.5” SATA 6Gb/s HDD/SSD bay (RAID 0/1/5/10 support) with LED indicator (2) 1 x M.2 2280 PCIe Gen 3.0 x4 NVMe™ SSD socket	
I/O Ports and Switches		1 x HDMI output 2 x GbE LAN 6 x USB 3.2 Gen 1 (5Gb/s) Type-A 2 x RS-232 DB-9 type 1 x Mic in	1 x Line out 1 x AC power in Inlet Power button with power LED (power on=Blue) AT/ATX mode switch Reset button
Expansion Slots		2 x PCIe 3.0 by 8 (by 16 slot) 2 x PCIe 3.0 by 4 (maximum card size supported: 68 mm x 167 mm) 1 x NGFF M.2 (2230) A Key socket (support Wi-Fi) 1 x NGFF M.2 (3042) B Key socket (support WWAN wits SIM slot)	
Thermal Solution		Smart Fan	
Power Supply		AC input ATX power supply 1. 250W power supply - Input: 115VAC~230VAC, 50/60Hz - Output (max.): 3.3V@12A, 5V@14A, 12V@25A, -12V@0.3A,+5Vsb@3A 2. 350W power supply (Build to Order) - Input: 115VAC~264VAC, 50/60Hz - Output (max.): 3.3V@14A, 5V@16A, 12V@29A, -12V@0.3A,+5Vsb@3A -Efficiency: Full load (100%) 87%, Typical load (50%) 90%, Light load (20%) 87%	
Watchdog Timer		Software Programmable support 1~255 sec. system reset	
Construction	IP Rating	IP66-rated front panel	
	Chassis Construction	Metal Housing	
	Mounting	Rack/Panel Mount	
	Color	Front Bezel : Cyan-blue (PSM 296C), Others: Black C	
	Cut-out dimensions (LxDxH) (mm)	391 x 324	447.8 x 267.2
	Dimensions (LxDxH) (mm)	408.4 x 341.4 x 119	469.8 x 289.2 x 120.8
Environmental	Operating Temperature	-20°C ~ 50°C (with SSD and up to TDP 65W processor) -20°C ~ 40°C (with HDD or add-on cards without fan)	
	Storage Temperature	-30°C ~ 60°C	
	Operating Humidity	5% ~95%, non-condensing	
	Vibration	5~17Hz, 0.1 double amplitude displacement 17~640Hz 1.5G acceleration peak to peak	
	Shock	10G acceleration part to part (11ms)	
	Safety and EMC	CE & FCC Class A certified	

Ordering Information

	Part No.	Description
15”	PPC-F15C-Q370-P/PC/25-R20	15" 450cd/m² 1024 x768 AI modular Panel PC , Intel® Pentium® Gold G5400T Processor (2-core, 4-thread, 3.10 GHz) TDP 35W, two PCIe x4 and two PCIe x8 slots, four HDD bays, 250W PSU, R20
	PPC-F15C-Q370-i3/PC/25-R20	15" 450cd/m² 1024 x768 AI modular Panel PC, Intel® Core™ i3-8100T Processor (4-core, 4-thread, 3.10 GHz) TDP 35W, two PCIe x4 and two PCIe x8 slots, four HDD bays, 250W PSU, R20
	PPC-F15C-Q370-i5/PC/25-R20*	15" 450cd/m² 1024 x768 AI modular Panel PC, Intel® Core™ i5-8500T Processor (6-core, 6-thread, 2.1 GHz) TDP 35W, two PCIe x4 and two PCIe x8 slots, four HDD bays, 250W PSU, R20
	PPC-F15C-Q370-i7/PC/25-R20*	15" 450cd/m² 1024 x768 AI modular Panel PC, Intel® Core™ i7-8700T Processor (6-core,12-thread,2.4 GHz) TDP 35W, two PCIe x4 and two PCIe x8 slots, four HDD bays, 250W PSU, R20
15.6”	PPC-FW15C-Q370-P/PC/25-R20	15.6" 400cd/m² 1366 x 768 AI modular Panel PC, Intel® Pentium® Gold G5400T Processor (2-core, 4-thread, 3.10 GHz) TDP 35W, two PCIe x4 and two PCIe x8 slots, four HDD bays, 250W PSU, R20
	PPC-FW15C-Q370-i3/PC/25-R20	15.6" 400cd/m² 1366 x 768 AI modular Panel PC, Intel® Core™ i3-8100T Processor (4-core, 4-thread, 3.10 GHz) TDP 35W, two PCIe x4 and two PCIe x8 slots, four HDD bays, 250W PSU, R20
	PPC-FW15C-Q370-i5/PC/25-R20*	15.6" 400cd/m² 1366 x 768 AI modular Panel PC, Intel® Core™ i5-8500T Processor (6-core, 6-thread, 2.1 GHz) TDP 35W, two PCIe x4 and two PCIe x8 slots, four HDD bays, 250W PSU, R20
	PPC-FW15C-Q370-i7/PC/25-R20*	15.6" 400cd/m² 1366 x 768 AI modular Panel PC, Intel® Core™ i7-8700T Processor (6-core,12-thread,2.4 GHz) TDP 35W, two PCIe x4 and two PCIe x8 slots, four HDD bays, 250W PSU, R20
17”	PPC-F17C-Q370-P/PC/25-R20	17" 350cd/m² 1280 x 1024 AI modular Panel PC, Intel® Pentium® Gold G5400T Processor (2-core, 4-thread, 3.10 GHz) TDP 35W, two PCIe x4 and two PCIe x8 slots, four HDD bays, 250W PSU, R20
	PPC-F17C-Q370-i3/PC/25-R20	17" 350cd/m² 1280 x 1024 AI modular Panel PC, Intel® Core™ i3-8100T Processor (4-core, 4-thread, 3.10 GHz) TDP 35W, two PCIe x4 and two PCIe x8 slots, four HDD bays, 250W PSU, R20
	PPC-F17C-Q370-i5/PC/25-R20*	17" 350cd/m² 1280 x 1024 AI modular Panel PC, Intel® Core™ i5-8500T Processor (6-core, 6-thread, 2.1 GHz) TDP 35W, two PCIe x4 and two PCIe x8 slots, four HDD bays, 250W PSU, R20
	PPC-F17C-Q370-i7/PC/25-R20*	17" 350cd/m² 1280 x 1024 AI modular Panel PC, Intel® Core™ i7-8700T Processor (6-core,12-thread,2.4 GHz) TDP 35W, two PCIe x4 and two PCIe x8 slots, four HDD bays, 250W PSU, R20
18.5”	PPC-FW19C-Q370-P/PC/25-R20	18.5" 400cd/m² 1366 x 768 AI modular Panel PC, Intel® Pentium® Gold G5400T Processor (2-core, 4-thread, 3.10 GHz) TDP 35W, two PCIe x4 and two PCIe x8 slots, four HDD bays, 250W PSU, R20
	PPC-FW19C-Q370-i3/PC/25-R20	18.5" 400cd/m² 1366 x 768 AI modular Panel PC, Intel® Core™ i3-8100T Processor (4-core, 4-thread, 3.10 GHz) TDP 35W, two PCIe x4 and two PCIe x8 slots, four HDD bays, 250W PSU, R20
	PPC-FW19C-Q370-i5/PC/25-R20*	18.5" 400cd/m² 1366 x 768 AI modular Panel PC, Intel® Core™ i5-8500T Processor (6-core, 6-thread, 2.1 GHz) TDP 35W, two PCIe x4 and two PCIe x8 slots, four HDD bays, 250W PSU, R20
	PPC-FW19C-Q370-i7/PC/25-R20*	18.5" 400cd/m² 1366 x 768 AI modular Panel PC, Intel® Core™ i7-8700T Processor (6-core,12-thread,2.4 GHz) TDP 35W, two PCIe x4 and two PCIe x8 slots, four HDD bays, 250W PSU, R20

*Build to order
**350W AC PSU models are by build-to-order manufacturing

Options

Item	PPC-F15C	PPC-FW15C	PPC-F17C	PPC-FW19C
Panel Mount Kit	FPK-12-R10	FPK-14-R10	FPK-13-R10	FPK-13-R10
Rack Mount Kit	FRK15C-R10	FRKW15C-R10	FRK17C-R10	FRKW19C-R10

Packing List

Item	Q'ty	Description
44013-030041-RS	16	Flat head screws for HDD bracket, M3*4
32702-000200-100-RS	1	European power cord, 1830mm

Fully Integrated I/O

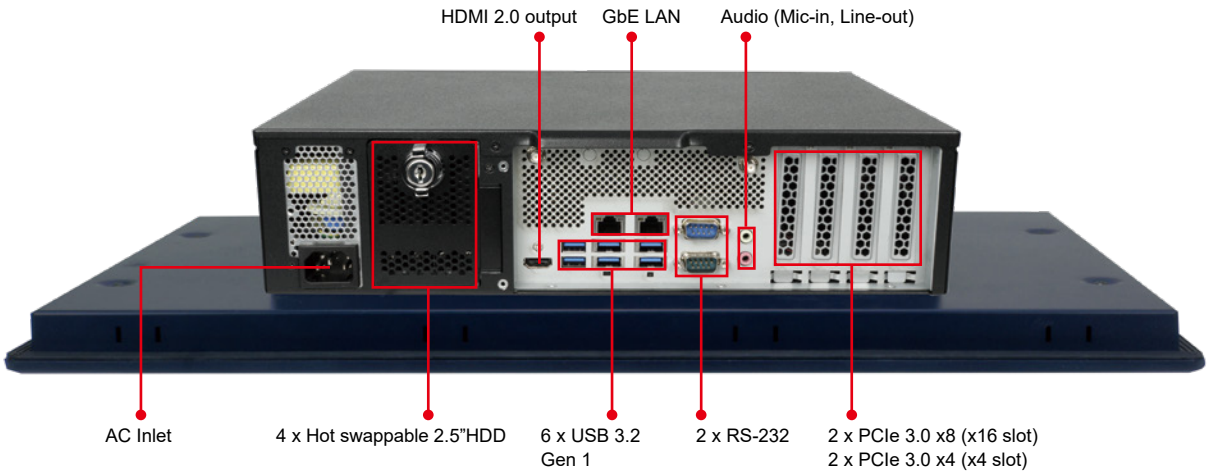

PPC-F15C-Q370 Dimensions

(Unit: mm)

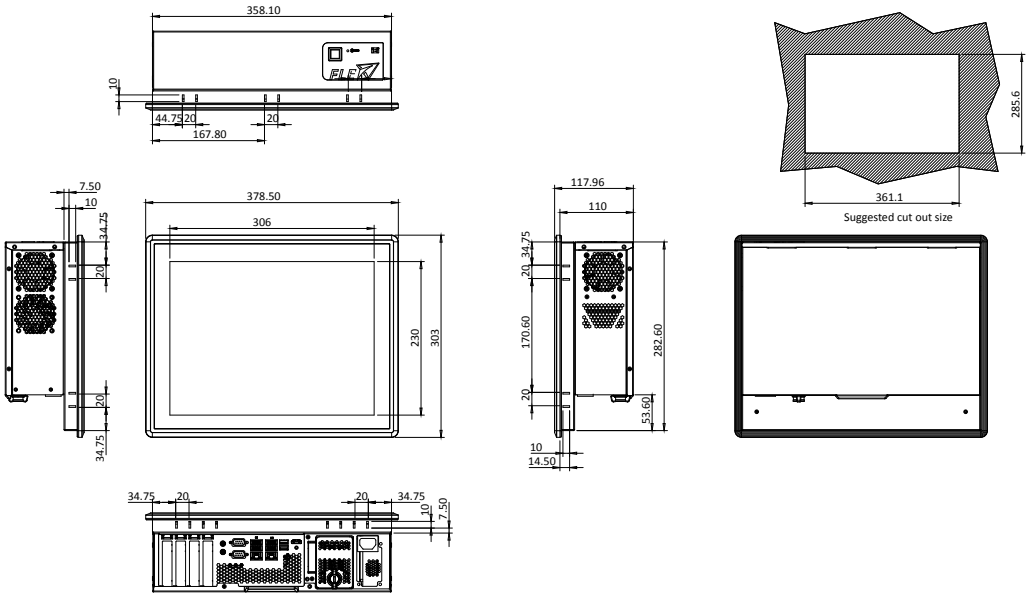

PPC-FW15C-Q370 Dimensions

(Unit: mm)

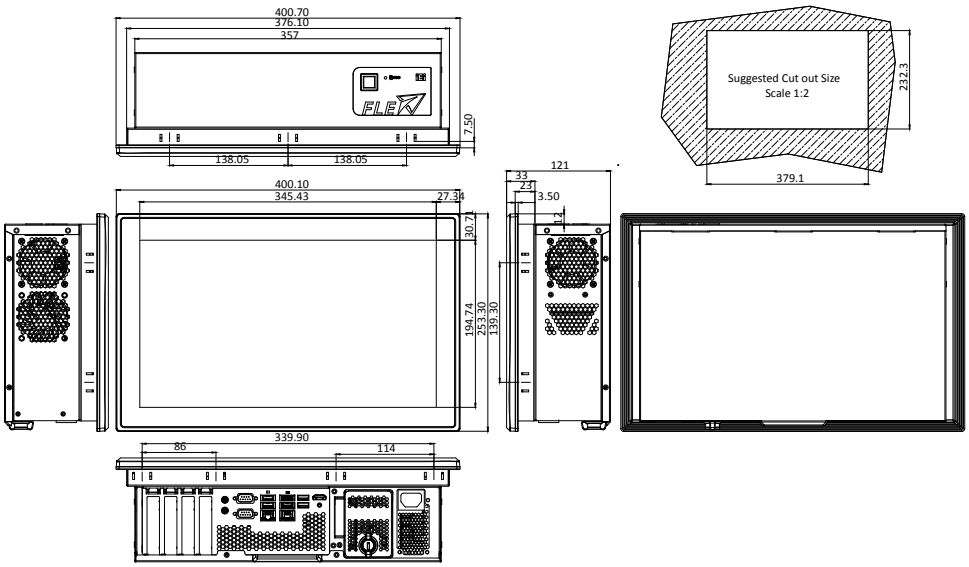

PPC-F17C-Q370 Dimensions

(Unit: mm)

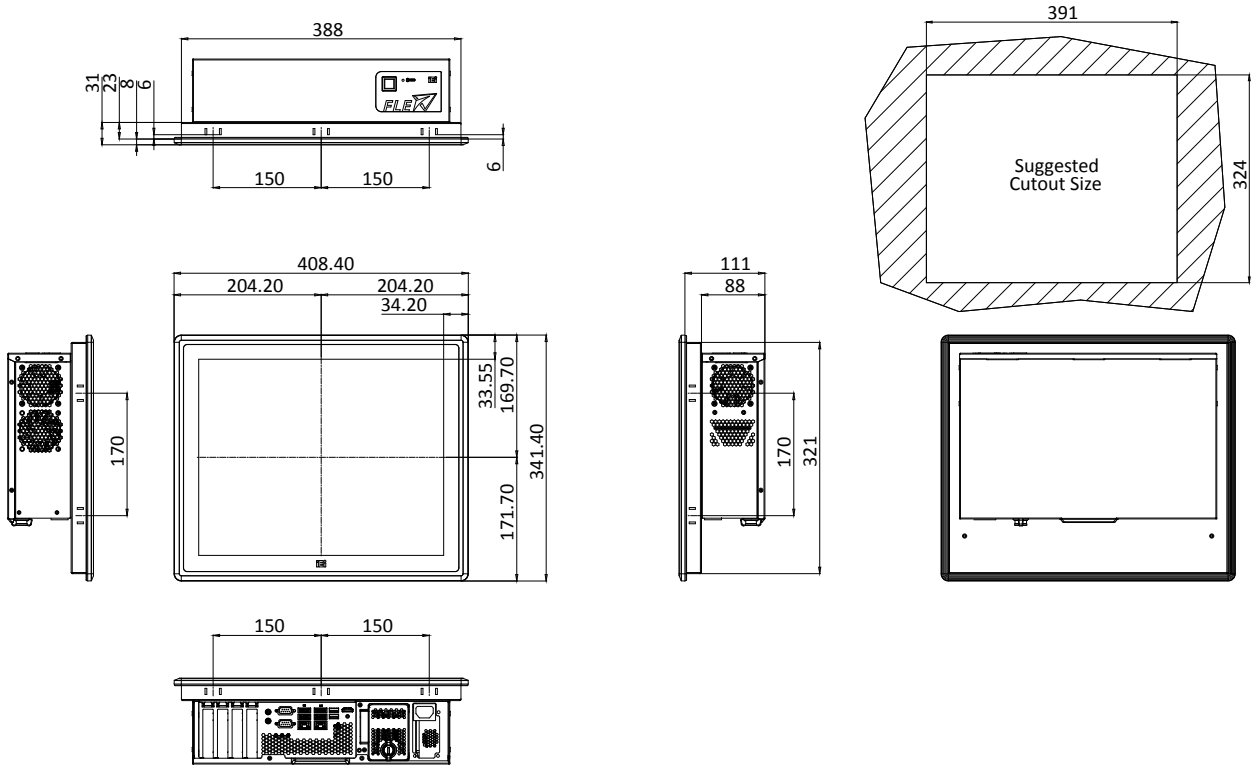

PPC-FW19C-Q370 Dimensions
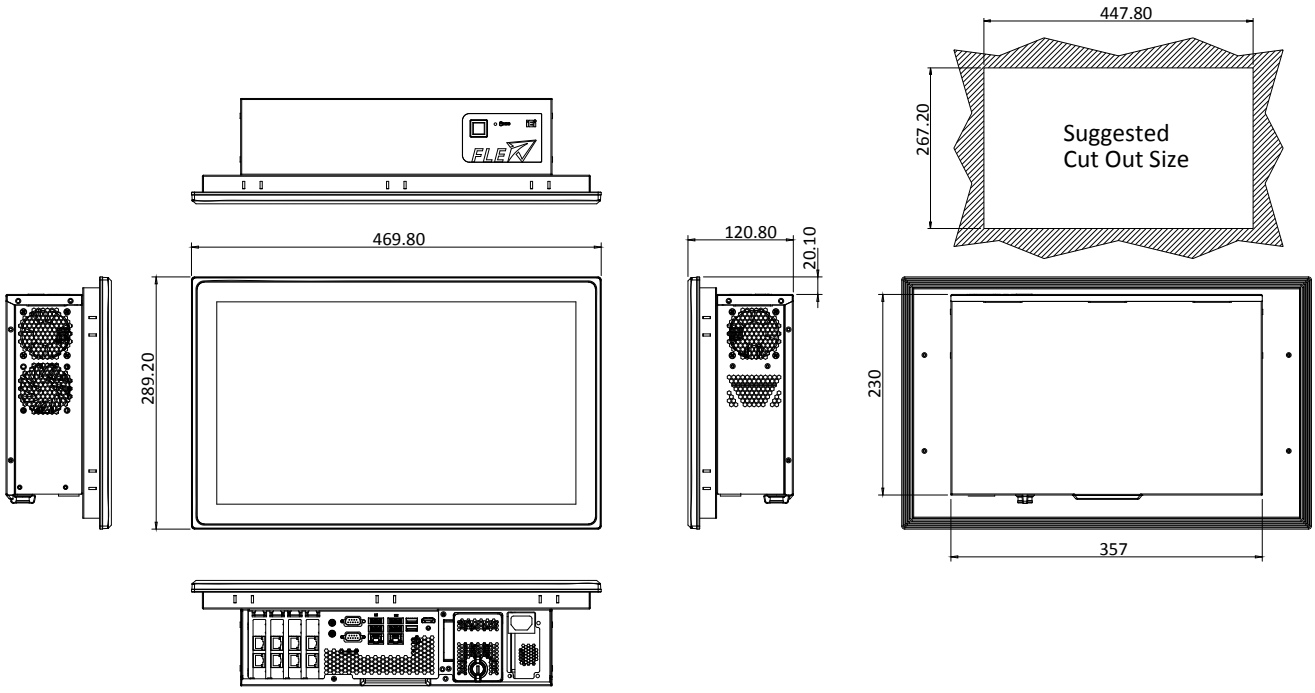
(Unit: mm)