12.1" Industrial Panel PC

# PPC-3712A-N26

## Intel® Atom™ N2600 Dual-Core Processor

## Features

- 12.1" 500 nits high brightness TFT LCD with LED backlight
- Dual Gigabit Ethernet provides continuous network service and allows sharing among different workgroups in two different subnets
- Optional 802.11b/g/n wireless kit
- One slim type CD-ROM drive bay
- Robust aluminum front bezel and metal casing
- IP 65 compliant front panel

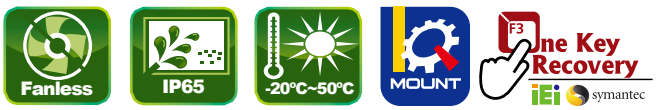


## Specifications

| Model | | PPC-3712A-N26 |
|---|---|---|
| Display | LCD Size | 12.1" |
| | Max. Resolution | 1024(W) x 768(H) |
| | Brightness (cd/m²) | 500 |
| | Contrast Ratio | 700:1 |
| | LCD Color | 262K |
| | Pixel Pitch (mm) (HxV) | 0.3075(H) x 0.3075(V) |
| | Viewing Angle (V/H) | 160°/160° |
| | Backlight MTBF (hrs) | 50000 (LED backlight) |
| Touch | Touchscreen | 5-wire resistive type with RS-232 interface |
| | Touch Controller | EETI MBMER4050CMBG |
| Motherboard | SBC | NANO-CV-N26001 |
| | CPU | Intel® Atom™ N2600 dual-core processor 1.6GHz |
| | Chipset | Intel® NM10 |
| | RAM | One 200-pin SO-DIMM socket, supporting DDR3 800MHz module for up to 2GB |
| | Ethernet | Realtek RTL8111E PCIe GbE controller supporting ASF 2.0 |
| | Audio Codec | Realtek ALC662 HD audio codec |
| I/O Ports and Switches | | 2 x RS-232<br>1 x RS-422/485<br>2 x RJ-45 for LAN port<br>2 x USB 3.0<br>2 x USB 2.0<br>1 x HDMI<br>1 x VGA port<br>1 x Line-in, Line-out, Mic-in<br>1 x DC power input jack<br>1 x Power switch |
| Drive Bay | HDD Drive Bay | 1 x 2.5" SATA HDD Bay |
| | SSD | 1 x mSATA (SATA2 signal) |
| | CD-ROM Drive Bay | Slim type CD ROM bay |
| Expansion Slot | | 1 x PCIe Mini card |
| Physical | Front Panel Contruction | Aluminum die-casting |
| | Chassis Construction | Heavy-duty steel (SECC) |
| | Mounting | Panel, wall, rack, stand and arm (VESA 100 mm x 100 mm) |
| | Front Panel Color | Silver (Pantone 8001C) |
| | Dimensions (WxHxD) (mm) | 340 x 260 x 74.8 |
| | Cut Out Dimensions (WxH) (mm) | 313 x 233 |
| | Net/Gross Weight | 6 kg / 8 kg |
| System Cooling | | Fanless |
| Environment | Operating Temperature | -10°C~50°C |
| | Storage Temperature | -20°C~60°C |
| | Vibration | 5~17Hz, 0.1 double amplitude displacement 17~640Hz 1.5G acceleration peak to peak |
| | Shock | 10G acceleration part to part (11ms) |
| Power Supply | Power Input | 9-28V DC Input |
| | Power Adapter | P/N: 63040-010060-110-RS<br>60W power adapter (Meets PSE)<br>Input: 90VAC~264VAC, 50/60Hz<br>Output: 12VDC |

## Ordering Information

| Part No. | Description |
|---|---|
| PPC-3712A-N26/R/2G-R12* | 12.1" 500 cd/m² XGA panel PC with Intel® Atom™ N2600 1.6GHz processor, 2GB DDR3 9 V~28 V DC RAM, and touchscreen, 9 V~28 V DC input, RoHS |

* PPC supports 9-28V DC input with 4-pin DC jack. Standard product inculdes 12V DC adapter. For terminal block solution, please contact sales team.

## Packing List

| Item | Part No. | Description |
|---|---|---|
| Screw Kit | 19600-000207-RS | |
| SATA CD-ROM Cable | 32801-006300-100-RS | SATA 7+6P female 180°, SATA 7P female 90°+lock, DU PONT 2x4P, P=2.54, female |
| Power Cord | 32702-000200-100-RS | European standard, 1830 mm, plug (16A, 250V), connector (10A, 250V) |
| Power Adapter | 63040-010060-110-RS | 60W, 90VAC~264VAC for PPC-3712A |
| PS/2 Cable | 32006-000300-100-RS | 1 x mini-DIN 6-pin male; 2 x mini-DIN 6-pin female |
| Panel Mounting Kit | 19Z00-000024-RS | 19Z00-000024-RS x8 |
| Wall Mounting Kit | 41014-057602-00-RS<br>41020-016102-00-RS | Ultra set plate<br>Wall mount bracket |
| IEI One Key Recovery CD | IEI-7B000-000478-RS | |
| Touchscreen Driver CD / Touch Pen | | |
| User Manual & Driver CD | | |

## IQ Mounting Options

| Item | Part No. |
|---|---|
| Arm | ARM-11-RS |
| Stand | STAND-100-RS |

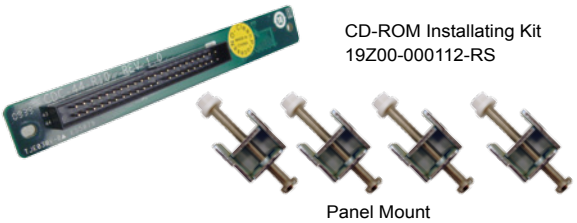

CD-ROM Installating Kit
19Z00-000112-RS

Panel Mount

## Options

| Item | Part No. | Description |
|---|---|---|
| RS-422/485 Cable | 32205-004900-100-RS | (A) D-sub 9-pin male<br>(B) DU PONT 2*7P, P=2.0 female |
| IDE CD-ROM Installation Kit | 19Z00-000112-RS | 50-pin CD-ROM connector to 44-pin IDE connector transfer board |
| HDD IDE Cable | 32200-000037-RS | 250 mm, IDE 44-pin |
| Wi-Fi Module | PPC-WL-KIT02-R11 | Wi-Fi module with RF cable and antenna, 1T1R, 802.11b/g/n |

## Fully Integrated I/O

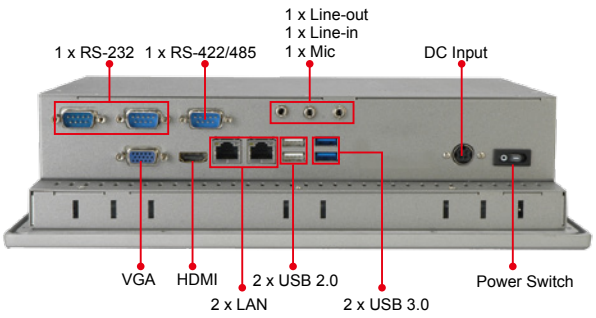

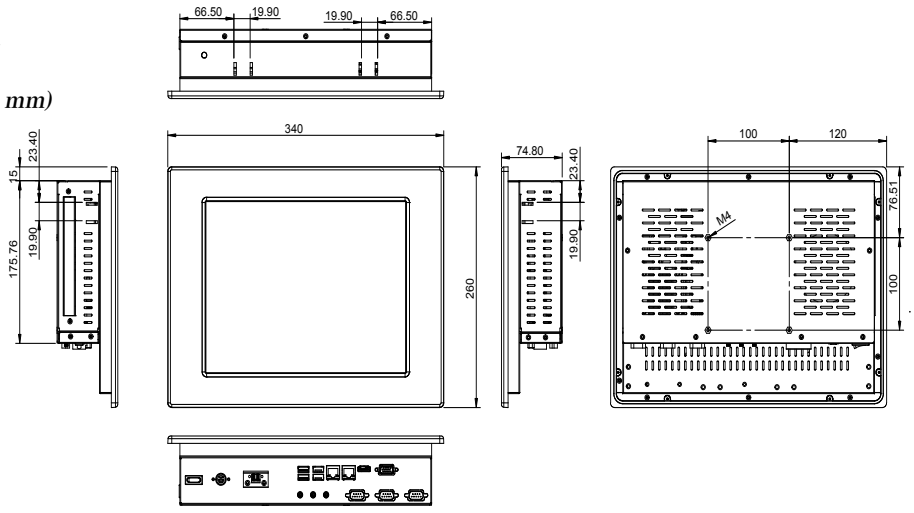
## PPC-3712A-N26 Dimensions (Unit: mm)