SPCIE-C236

Full-size PICMG 1.3 CPU Card supports LGA 1151 Intel® Xeon® E3, Core™ i3/Pentium®/ Celeron® CPU per Intel® C236, ECC & non-ECC DDR4, VGA/IDP, Dual Intel® PCIe GbE, USB 3.0, SATA 6Gb/s, PCIe mini, mSATA, HD Audio, Intel® AMT, iRIS-2400 and RoHS

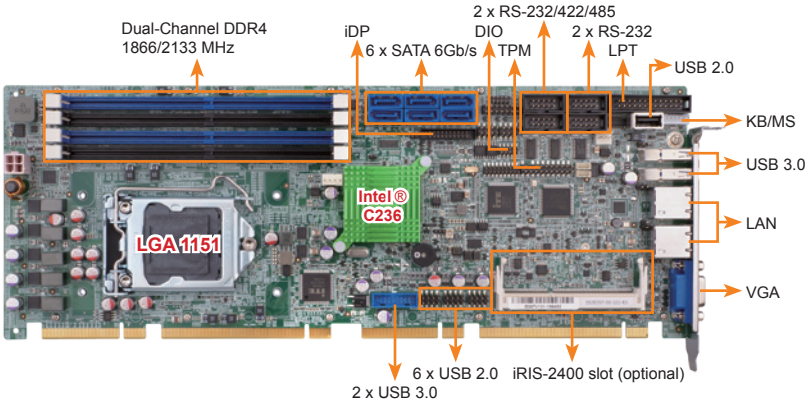

New

PCIe Mini & mSATA colay

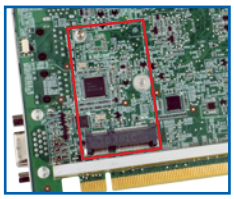

◄ mSATA

▲ Half-size wireless LAN card

Mini PCIe interface provide SATA, PCIe x1 and USB signal such as mSATA, PCIe device, and wireless LAN card for full-size or half-size devices.

One Key Recovery

symantec.

TPM 2.0 Support

Intel® AMT 11.0

DDR4 2133 | USB 3.0 | SATA 6Gb/s | Dual GbE | mSATA | iDP

Specifications

- CPU
  LGA 1151 Intel® Xeon® E3, Core™ i3/Pentium®/Celeron® processor supported
- Chipset
  Intel® C236
- Memory
  Four 288-pin 2133/1867 MHz Dual-Channel DDR4 ECC & non-ECC unbuffered DIMM supported up to 64GB
- BIOS
  UEFI BIOS
- Graphic Engine
  Intel® HD Graphics Gen 9 supports DX11/12, OpenCL 2.x and OpenGL 4.3/4.4
  Decode/Encode for HEVC, VP8, VP9, VDENC
- Display Output
  Dual independent display
  1 x VGA (up to 1920x1200@60 Hz)
  1 x iDP interface for HDMI, LVDS, VGA, DVI and DisplayPort (up to 3840x2160@60 Hz)
- Ethernet
  LAN1: Intel® I219LM Clarkville-V with Intel® AMT 11.0 supported
  LAN2: Intel® I210 PCIe controller
- External I/O Interface
  2 x USB 3.0
- Internal I/O Interface
  1 x KB/MS (1x6 pin)
  1 x LPT (2x13 pin)
  1 x mSATA (SATA & USB signal)
  1 x USB 2.0 (180° Type-A)
  2 x RS-232 (2x5pin, P=2.54)
  2 x RS-232/422/485 (2x5 pin, P=2.54)
  2 x USB 3.0 (2x10 pin)
  6 x SATA 6Gb/s (RAID 0/1/5/10 supported)
  6 x USB 2.0 (2x4 pin, P=2.54)
- Front Panel
  1 x Front Panel (1x10 pin, power LED, HDD LED, speaker, power button, reset button)
- LAN LED
  2 x LAN LED (1x2 pin)
- Audio
  Support 7.1 channel HD audio by IEI AC-KIT-892HD kit
- TPM
  1 x TPM (2x10 pin)
- SMBus
  1 x SMBus (1x4 pin)
- I²C
  1 x I²C (1x4 pin)
- iRIS Remote Management Module
  1 x iRIS-2400 slot (optional)
- Expansion
  16-lane PCIe link from CPU via golden finger:
  Supports one PCIe x16, or two PCIe x8, or one PCIe x8 + two PCIe x4 on the backplane (configured via BIOS)
  4-lane PCIe link from PCH via golden finger:
  Supports four PCIe x1 slots or one PCIe x4 slot on the backplane (configured via BIOS switch)
  1 x Full/Half-size PCIe mini card slot
- Watchdog Timer
  Software programmable support 1~255 sec. system reset
- Digital I/O: 8-bit digital I/O (2x5 pin)
- Fan Connector
  1 x CPU smart fan (1x4 pin)
  1 x System smart fan (1x3 pin)
- Power Supply
  5V/12V, AT/ATX support
- Power Consumption
  5V@3.22A, 12V@6.81A, 3.3V@1.21A, 5VSB@0.18A
  (Intel® Xeon® E3-1275 v5 3.60 GHz CPU with 64GB (16GBx4) 2133 MHz DDR4 memory)
- Operating Temperature
  -20°C ~ 60°C
- Operating Humidity
  5% ~ 95%, non-condensing
- Dimensions
  338 mm x 126 mm
- Weight
  GW: 1000g / NW: 420g

Features

- PICMG 1.3 full-size CPU Card
- LGA 1151 Intel® Xeon® E3, Core™ i3/Pentium®/Celeron® processor supported
- Four 288-pin 1867/2133MHz DDR4 ECC & non-ECC unbuffered DIMM
- Supports dual independent display by VGA & internal DP pin header
- Supports mini-PCIe device & mSATA via PCIe mini card slot
- Intel® PCIe GbE with Intel® AMT 11.0 supported
- Supports RAID 0, 1, 5, 10 function via SATA 6Gb/s
- TPM 1.2 & 2.0 hardware security function supported by TPM module

Packing List

1 x SPCIE-C236 single board computer	
1 x SATA cable	1 x QIG
1 x Mini jumper pack	1 x Utility CD

Ordering Information

Part No.	Description
SPCIE-C236-R10	Full-size PICMG 1.3 CPU Card supports LGA 1151 Intel® Xeon® E3, Core™ i3/Pentium®/Celeron® CPU per Intel® C236, ECC & non-ECC DDR4, Dual Intel® PCIe GbE, USB 3.0, VGA/ IDP, SATA 6Gb/s, PCIe mini, mSATA, HD Audio, Intel® AMT and RoHS
SPCIE-C236-i2-R10**	Full-size PICMG 1.3 CPU Card supports LGA 1151 Intel® Xeon® E3, Core™ i3/Pentium®/Celeron® CPU per Intel® C236, ECC & non-ECC DDR4, Dual Intel® PCIe GbE, USB 3.0, VGA/ IDP, SATA 6Gb/s, PCIe mini, mSATA, HD Audio, Intel® AMT, iRIS-2400 and RoHS
19800-000049-RS	LPT flat cable, 240mm, P=2.54
19800-000075-RS	PS/2 KB/MS cable with bracket, 220mm, P=2.0
32102-000100-200-RS	SATA power cable, MOLEX 5264-4P to SATA15P
AC-KIT-892HD-R10	7.1 channel HD Audio kit with Realtek ALC892 support dual audio streams
CF-1150SA-R10	Special cooler kit for LGA1150, High-performance compatible, 95W
CF-1150SB-R11	Special cooler kit for LGA1150, High-performance compatible, 65W
CF-1150SC-R20	Special cooler kit for LGA1150, 1U chassis compatible, 65W
CF-1150SE-R11	Special cooler kit for LGA1150, high-performance compatible, 95W
CF-1150SF-R10	Special cooler kit for LGA1150, 1U chassis compatible, 54W
DP-DP-R10	DisplayPort to DisplayPort converter board (for iEi IDP connector)
DP-DVI-R10	DisplayPort to DVI-D converter board (for iEi IDP connector)
DP-HDMI-R10	DisplayPort to HDMI converter board (for iEi IDP connector)
DP-LVDS-R10	DisplayPort to LVDS converter board (for iEi IDP connector)
DP-VGA-R10	DisplayPort to VGA converter board (for iEi IDP connector)
SAIDE-KIT01-R10	SATA to IDE/CF Converter board

**By order production, MOQ: 100